Q.1-30 Carry One Mark Each

1. If $x = a(\theta + \sin\theta)$ and $y = a(1 - \cos\theta)$, then $\frac{dy}{dx}$ will be equal to

(a) $\sin\left(\frac{\theta}{2}\right)$ (b) $\cos\left(\frac{\theta}{2}\right)$ (c) $\tan\left(\frac{\theta}{2}\right)$ (d) $\cot\left(\frac{\theta}{2}\right)$

2. The angle between two unit-magnitude coplanar vectors P(0.86, 0.500,0) and Q(0.259, 0.956, 0) will be

(a) 0° (b) 30° (c) 45° (d) 60°

3. The sum of the eigen values of the matrix given below is $\begin{pmatrix} 1 & 1 & 3 \\ 1 & 5 & 1 \\ 3 & 1 & 1 \end{pmatrix}$

(a) 5 (b) 7 (c) 9 (d) 18

4. The figure shows a pin-jointed plane truss loaded at the point M by hanging a mass of 100 kg. The member LN of the truss is subjected to a load of

(a) 0 Newton
(b) 490 Newtons in compression
(c) 981 Newtons in compression
(d) 981 Newtons in tension

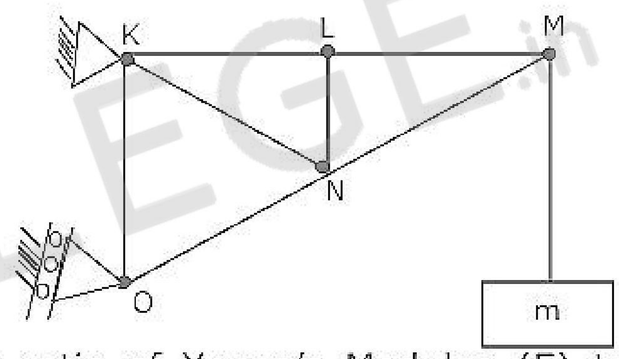

5. In terms of Poission's ratio (v) the ratio of Young's Modulus (E) to Shear Modulus (G) of elastic materials is

(a) $2(1 + v)$ (b) $2(1 - v)$ (c) $\frac{1}{2}(1+v)$ (d) $\frac{1}{2}(1-v)$

6. Two mating spur gears have 40 and 120 teeth respectively. The pinion rotates at 1200 rpm and transmits a torque of 20 N.m. The torque transmitted by the gear is

(a) 6.6 Nm (b) 20 Nm (c) 40 Nm (d) 60 Nm

7. The figure shows the state of stress at a certain point in a stressed body. The magnitudes of normal stresses in the x and y direction are 100 MPa respectively. The radius of Mohr's stress circle representing this state of stress is

(a) 120 (b) 80
(c) 60 (d) 40

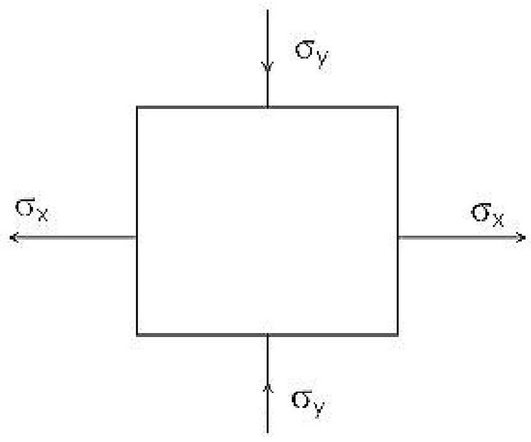

ZOLLEGE.in

8. For a mechanism shown below, the mechanical advantage for the given configuration is

(a) 0 (b) 0.5 (c) 1.0 (d) ∞

9. A vibrating machine is isolated from the floor using springs. If the ratio of excitation frequency of vibration of machine to the natural frequency of the isolation system is equal to 0.5, the transmissibility of ratio of isolation is

(a) $\frac{1}{2}$ (b) $\frac{3}{4}$ (c) $\frac{4}{3}$ (d) 2

10. A torque of 10 Nm is transmitted through a stepped shaft as shown in figure. The torsional stiffnesses of individual sections of lengths MN, NO and OP are 20 Nm/rad, 30 Nm/rad and 60 Nm respectively. The angular deflection between the ends M and P of the shaft is

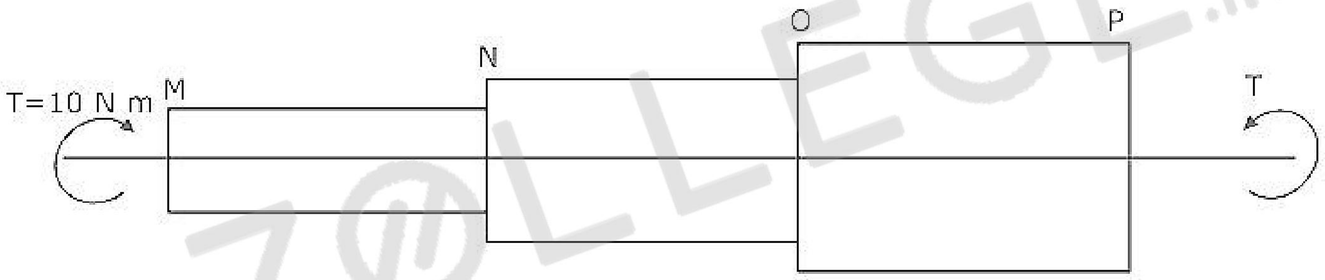

(a) 0.5 rad (b) 1.0 rad (c) 5.0 rad (d) 10.0 rad

11. In terms of theoretical stress concentration factor (K_t) and fatigue stress concentration factor (K_f), the notch sensitivity 'q' is expressed as

(a) $\frac{(K_f-1)}{(K_t-1)}$ (b) $\frac{(K_f-1)}{(K_t+1)}$ (c) $\frac{(K_t-1)}{(K_f-1)}$ (d) $\frac{(K_f+1)}{(K_t-1)}$

12. The S-N curve for steel becomes asymptotic nearly at

(a) 10^3 cycles (b) 10^4 cycles (c) 10^6 cycles (d) 10^9 cycles

13. In the window air conditioner, the expansion device used is

(a) capillary tube (b) thermostatic expansion valve
(c) automatic expansion valve (d) float valve

14. During chemical dehumidification process of air

ZOLLEGE.in

(a) dry bulb temperature and specific humidity decrease
(b) dry bulb temperature increases and specific humidity decreases
(c) dry bulb temperature decreases and specific humidity increases
(d) dry bulb temperature and specific humidity increase

15. At the time of starting, idling and low speed operation, the carburetor supplies a mixture which can be termed as
(a) lean (b) slightly leaner than stoichiometric
(c) stoichimetric (d) rich

16. One dimensional unsteady state heat transfer equation for a sphere with heat generation at the rate of 'q' can be written as
(a) $\frac{1}{r}\frac{\partial}{\partial r}\left(r\frac{\partial T}{\partial r}\right)+\frac{q}{k}=\frac{1}{\alpha}\frac{\partial T}{\partial t}$ (b) $\frac{1}{r^2}\frac{\partial}{\partial r}\left(r^2\frac{\partial T}{\partial r}\right)+\frac{q}{k}=\frac{1}{\alpha}\frac{\partial}{\partial t}$
(c) $\frac{\partial^2 T}{\partial r^2}+\frac{q}{k}=\frac{1}{\alpha}\frac{\partial T}{\partial t}$ (d) $\frac{\partial^2}{\partial r^2}(rT)+\frac{q}{k}=\frac{1}{\alpha}\frac{\partial T}{\partial t}$

17. An incompressible fluid (kinematic viscosity, 7.4×10^{-7} m^2/s, specific gravity, 0.88) is held between two parallel plates. If the top late is moved with a velocity of 0.5 m/s while the bottom one is held stationary, the fluid attains a linear velocity profile in the gap of 0.5 mm between these plates; the shear stress in Pascals on the surface of top plate is
(a) 0.651×10^{3} (b) 0.651
(c) 6.51 (d) 0.651×10^{3}

18. Environment friendly refrigerant $R134_a$ is used in the new generation domestic refrigerators. Its chemical formula is
(a) $CH\,Cl\,F_2$ (b) $C_2\,Cl_3\,F_3$
(c) $C_2\,Cl_2\,F_4$ (d) $C_2\,H_2\,F_4$

19. A fluid flow is represented by the velocity field $\bar{V}=ax+\bar{i}+ay\bar{j}$, where a is a constant. The equation of streamline passing through a point (1,2) is
(a) $x-2y=0$ (b) $2x+y=0$
(c) $2x-y=0$ (d) $x+2y=0$

20. A gas contained in a cylinder is compressed, the work required for compression being 5000 kJ. During the process, heat interaction of 200 kJ causes the surroundings to the heated. The change in internal energy of the gas during the process is
(a) -7000 kJ (b) −3000 kJ (c) +3000 kJ (d) + 7000 kJ

21. The compression ratio of a gas power plant cycle corresponding to maximum work output for the given temperature limits of T_{min} and T_{max} will be

ZOLLEGE.in

(a) $\left(\frac{T_{max}}{T_{min}}\right)^{\frac{\gamma}{2(\gamma-1)}}$ (b) $\left(\frac{T_{min}}{T_{max}}\right)^{\frac{\gamma}{2(\gamma-1)}}$ (c) $\left(\frac{T_{max}}{T_{min}}\right)^{\frac{\gamma-1}{\gamma}}$ (d) $\left(\frac{T_{min}}{T_{max}}\right)^{\frac{\gamma-1}{\gamma}}$

22. In an interchangeable assembly, shafts of size $25.000^{+0.040}_{-0.0100}$ mm mate with holes of size $25.000^{+0.020}_{-0.000}$ mm. The maximum possible clearance in the assembly will be

(a) 10 microns (b) 20 microns

(c) 30 microns (d) 60 microns

23. During the execution of a CNC part program block

NO20 GO2 X45.0 Y25.0 R5.0 the type of tool motion will be

(a) circular Interpolation - clockwise

(b) circular Interpolation - counterclockwise

(c) linear Interpolation

(d) rapid feed

24. The mechanism of material removal in EDM process is

(a) Melting and Evaporation (b) Melting and Corrosion

(c) Erosion and Cavitation (d) Cavitation and Evaporation

25. Two 1 mm thick steel sheets are to be spot welded at a current of 5000 A. Assuming effective resistance to be 200 micro-ohms and current flow time of 0.2 second, heat generated during the process will be

(a) 0.2 Joule (b) 1 Joule

(c) 5 Joule (d) 1000 Joules

26. In PERT analysis a critical activity has

(a) maximum Float (b) zero Float

(c) maximum Cost (d) minimum Cost

27. For a product, the forecast and the actual sales for December 2002 were 25 and 20 respectively. If the exponential smoothing constant (α) is taken as 0.2, the forecast sales for January 2003 would be

(a) 21 (b) 23 (c) 24 (d) 27

28. There are two products P and Q with the following characteristics

ZOLLEGE.in

Product	Demand (Units)	Order Cost (Rs/order)	Holding Cost (Rs./unit/year)
P	100	50	4
Q	400	50	1

The economic order quantity (EOQ) of products P and Q will be in the ratio

(a) 1:1 (b) 1:2 (c) 1:4 (d) 1:8

29. Misrun is a casting defect which occurs due to

(a) very high pouring temperature of the metal

(b) insufficient fluidity of the molten metal

(c) absorption of gases by the liquid metal

(d) improper alignment of the mould flasks

30. The percentage of carbon in gray cast iron is in the range of

(a) 0.25 to 0.75 percent (b) 1.25 to 1.75 percent

(c) 3 to 4 percent (d) 8 to 10 percent

Q. 31-90 Carry Two Marks Each

31. The following data about the flow of liquid was observed in a continuous chemical process plant

Flow rate (litres/sec)	7.5 to 7.7	7.7 to 7.9	7.9 to 8.1	8.1 to 8.3	8.3 to 8.5	8.5 to 8.7
Frequency	1	5	35	17	12	10

Mean flow rate of the liquid is

(a) 8.00 litres/sec (b) 8.096 litres/sec

(c) 8.16 litres/sec (d) 8.26 litres/sec

32. From a pack of regular playing cards, two cards are drawn at random. What is the probability that both cards will be Kings, if the first card is NOT replaced?

(a) $\frac{1}{26}$ (b) $\frac{1}{52}$ (c) $\frac{1}{169}$ (d) $\frac{1}{221}$

33. A delayed unit step function is defined as $u(t-a) = \begin{cases} 0 \text{ for } t<a \\ 1 \text{ for } t \geq a \end{cases}$. Its Laplace transform is

ZOLLEGE.in

(a) $a.e^{as}$ (b) $\frac{e^{as}}{s}$ (c) $\frac{e^{as}}{s}$ (d) $\frac{e^{as}}{a}$

34. The values of a function f(x) are tabulated below

x	f(x)
0	1
1	2
2	1
3	10

Using Newton's forward difference formula, the cubic polynomial that can be fitted to the above data, is

(a) $2x^3 + 7x^2 - 6x + 2$ (b) $2x^2 - 7x^2 + 6x - 2$

(c) $x^3 - 7x^2 - 6x^2 + 1$ (d) $2x^2 - 7x^2 + 6x + 1$

35. The volume of an object expressed in spherical co-ordinates is given by

$$V = \int_0^{2\pi} \int_0^{\frac{\pi}{3}} \int_0^1 r^2 \sin\varnothing dr\varnothing d\varnothing d\theta$$

The value of the integral is

(a) $\frac{\pi}{3}$ (b) $\frac{\pi}{6}$ (c) $\frac{2\pi}{3}$ (d) $\frac{\pi}{4}$

36. For which value of x will be matrix given below become singular?

$$\begin{pmatrix} 8 & x & 0 \\ 4 & 0 & 2 \\ 12 & 6 & 0 \end{pmatrix}$$

(a) 4 (b) 6 (c) 8 (d) 12

37. In the figure shown, the relative velocity of link 1 with respect to link 2 is 12 m/sec. Link 2 rotates at a constant speed of 120 rpm. The magnitude of Coriolis component of acceleration of link 1 is

ZOLLEGE.in

(a) 302 m/s^2 (b) 604 m/s^2 (c) 906 m/s^2 (d) 1208 m/s^2

38. The figure below shows a planar mechanism with single degree of freedom. The instant center 24 for the given configuration is located at a position

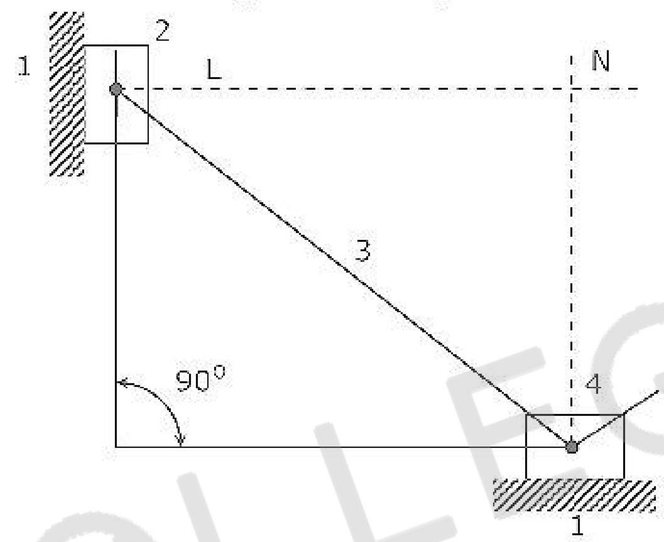

(a) L (b) M (c) N (d) ∞

39. A uniform stiff rod of length 300 mm and having a weight of 300 N is pivoted at one end and connected to a spring at the other end. For keeping the rod vertical ins a stable position the minimum value of spring constant K needed is

(a) 300 N/m
(b) 400 N/m
(c) 500 N/m
(d) 1000 N/m

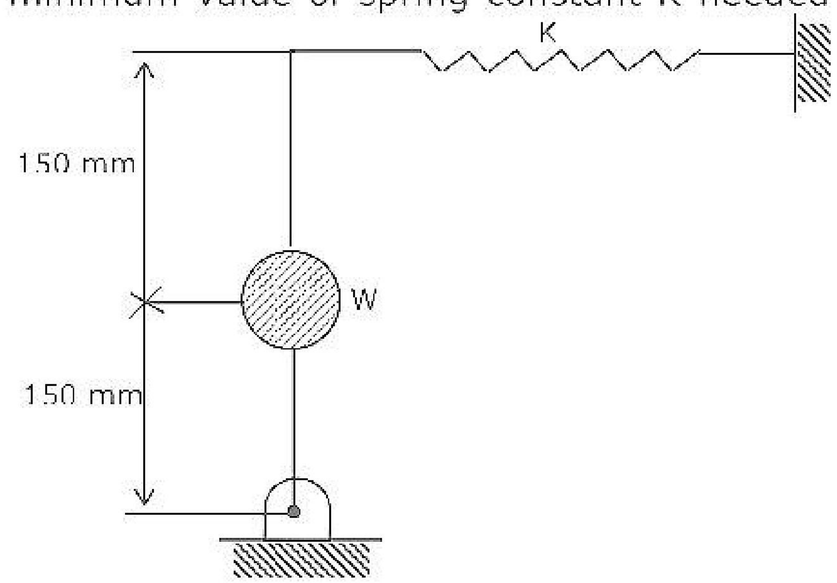

40. A mass M, of 20 kg is attached to the free end of a steel cantilever beam of length 1000 mm having a cross-section of 25 × 25 mm. Assume the mass of the cantilever to be negligible and $E_{steel} = 200GPa$. If the lateral vibration of

ZOLLEGE.in

this system is critically damped using a viscous damper, the damping constant of the damper is

(a) 1250 Ns/m

(b) 625 Ns/m

(c) 312.50 Ns/m

(d) 156.25 Ns/m

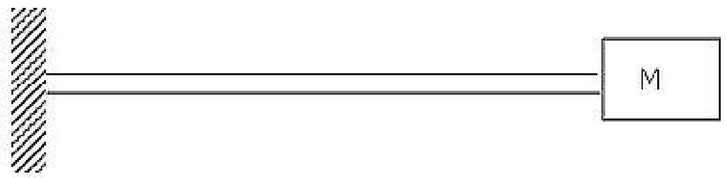

41. In a bolted joint two members are connected with an axial tightening force of 2200 N. if the bolt used has metric threads of 4 mm pitch, the torque required for achieving the tightening force is

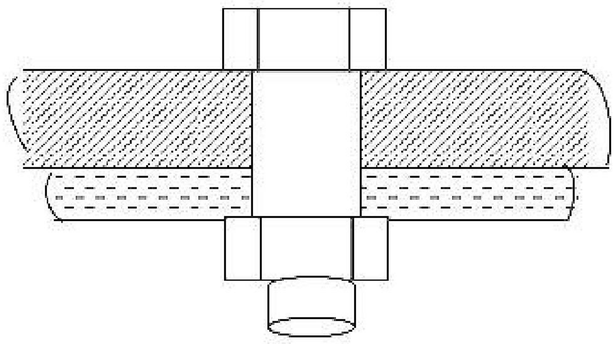

(a) 0.7 Nm (b) 1.0 Nm (c) 1.4 Nm (d) 2.8 Nm

42. The figure below shows a steel rod of 25 mm^2 cross sectional area. It is loaded at four points, K, L, M and N. Assume $E_{steel} = 200GPa$. The total change in length of the rod due to loading is

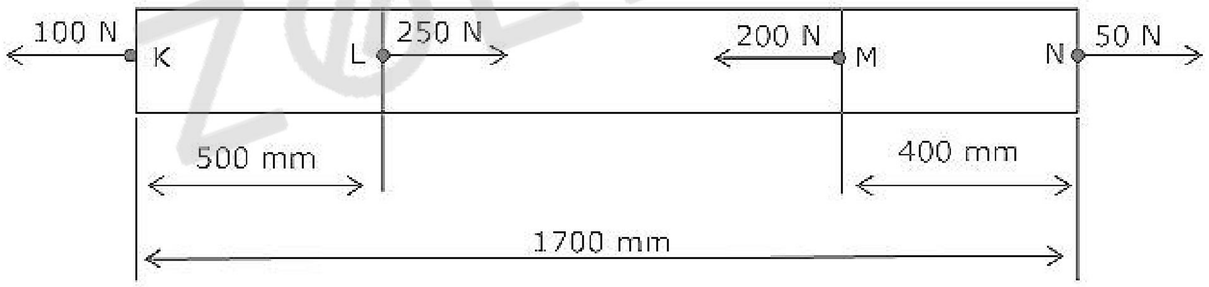

(a) 1μm (b) -10 μm (c) 16μm (d) -20μm

43. An ejector mechanism consists of a helical compression spring having a spring constant of K = 981 × 10^3 N/m. it is pre-compressed by 100 mm from its free

ZOLLEGE.in

state. If it is used to eject a mass of 100 kg held on it, the mass will move up through a distance of

(a) 100 mm

(b) 500 mm

(c) 981 mm

(d) 1000 mm

44. A rigid body shown in the Fig.(a) has a mass of 10 kg. It rotates with a uniform angular velocity 'ω'. A balancing mass of 20 kg is attached as shown in Fig. (b). The percentage increase in mass moment of inertia as a result of this addition is

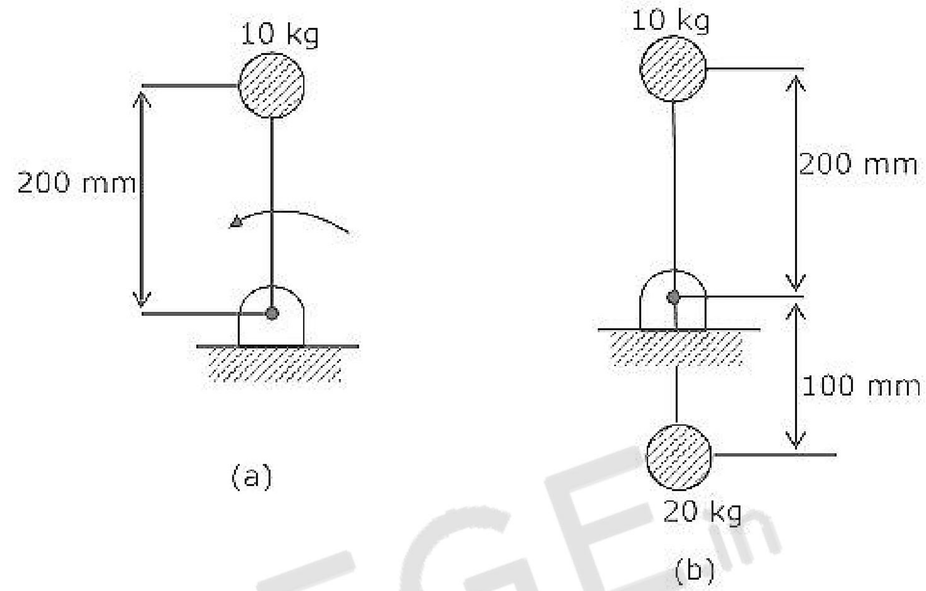

(a) 25%

(b) 50%

(c) 100%

(d) 200%

45. The figure shows a pair of pin-jointed gripper tongs holding an object weighing 2000 N. the co-efficient of friction (μ) at the gripping surface is 0.1XX is the line of action of the input force and YY is the line of application of gripping force. If the pin-joint is assumed to be frictionless, the magnitude of force F required to hold the weight is

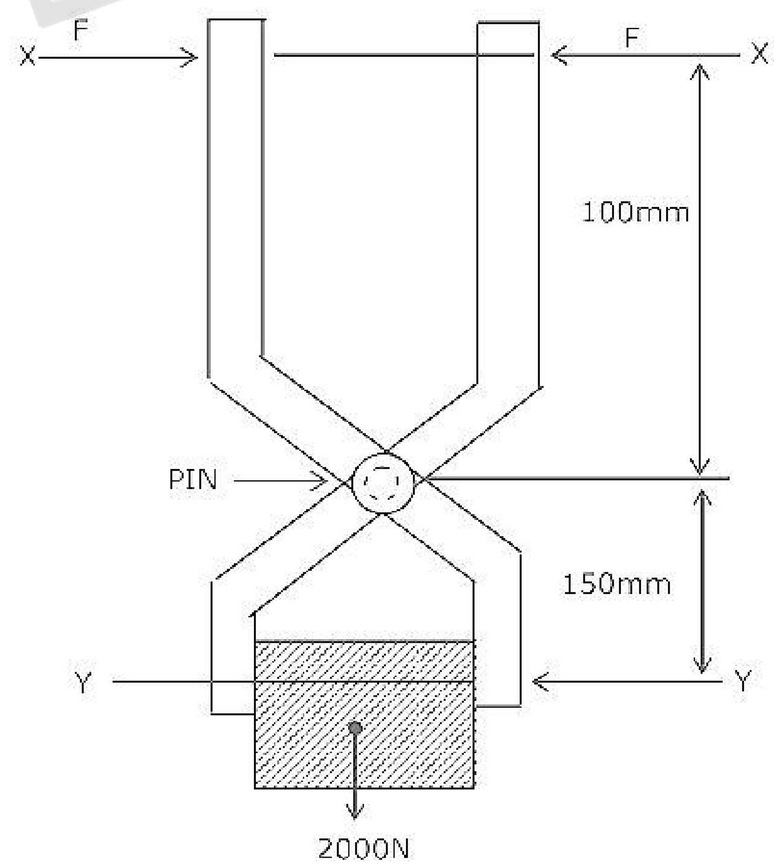

(a) 1000 N

(b) 2000 N

(c) 2500 N

(d) 5000 N

46. A solid circular shaft of 60 mm diameter transmits a torque of 1600 N.m. The value of maximum shear stress develop is

ZOLLEGE.in

(a) 37.72 MPa (b) 47.72 MPa

(c) 57.72 MPa (d) 67.72 MPa

47. For a fluid flow through a divergent pipe of length L having inlet and outlet radii and R_1 and R_2 respectively and a constant flow rate of Q, assuming the velocity to be axial and uniform at any cross section, the acceleration at the exit is

(a) $\frac{2Q(R_1 - R_2)}{\pi L R_2^3}$ (b) $\frac{2Q^2(R_1 - R_2)}{\pi L R_2^3}$

(c) $\frac{2Q^2(R_1 - R_2)}{\pi^2 L R_2^5}$ (d) $\frac{2Q^2(R_2 - R_1)}{\pi^2 L R_2^5}$

48. A closed cylinder having a radius R and height H is filled with oil density ρ. If the cylinder is rotated about its axis at an angular velocity of ω, the thrust at the bottom of the cylinder is

(a) $\pi R^2 \rho g H$ (b) $\pi R^2 \frac{\rho \omega^2 R^2}{4}$

(c) $\pi R^2 (\rho \omega^2 R^2 + \rho g H)$ (d) $\pi R^2 \left(\frac{\rho \omega^2 R^2}{4} + \rho g H\right)$

49. For air flow over a flat plate, velocity (U) and boundary layer thickness (δ) can be expressed respectively, as

$$\frac{U}{U_\infty} = \frac{3}{2}\frac{y}{\delta} - \frac{1}{2}\left(\frac{y}{\delta}\right)^3 ; \delta = \frac{4.64x}{\sqrt{Re_x}}$$

If the free stream velocity is 2m/s, and air has kinematic viscosity of 1.5×10^{-5} m^2/s and density of 1.23 kg/m^3, the wall shear stress at x = 1m, is

(a) 2.36×10^2 N/m^2 (b) 43.6×10^{-3} N/m^2

(c) $4.36 \times 10^{-3} N/m^2$ (d) 2.18×10^{-3} N/m^2

50. A centrifugal pump is required to pump water to an open water tank situated 4 km away from the location of the pump through a pipe of diameter 0.2 m having Darcy's friction factor of 0.01. The average speed of water in the pipe is 2 m/s. if it is maintain a constant head of 5 m in the tank, neglecting other minor losses, the absolute discharge pressure at the pump exit is

(a) 0.449 bar (b) 5.503 bar

(c) 44.911 bar (d) 55.203 bar

51. A heat engine having an efficiency of 70% is used to drive a refrigerator having a co-efficient of performance of 5. The energy absorbed from low

ZOLLEGE.in

temperature reservoir by the refrigerator for each kJ of energy absorbed from high temperature source by the engine is

(a) 0.14 kJ (b) 0.71 kJ (c) 3.5 kJ (d) 7.1 kJ

52. A solar collector receiving solar radiation at the rate of 0.6 kW/m^2 transforms it to the internal energy of a fluid at an overall efficiency of 50%. The fluid heated to 350 K is used to run a heat engine which rejects heat at 313 K. If the heat engine is to deliver 2.5 kW power, the minimum area of the solar collector required would be

(a) 8.33 m^2 (b) 16.66 m^2 (c) 39.68 m^2 (d) 79.36 m^2

53. The pressure gauges G_1 and G_2 installed on the system show pressures of P_{G1} = 5.00 bar and P_{G2}=1.00 bar. The value of unknown pressure P is

(a) 1.01 bar

(b) 2.01 bar

(c) 5.00 bar

(d) 7.01 bar

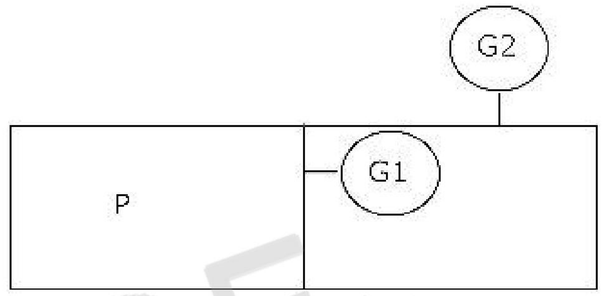

54. A steel billet of 2000 kg mass is to be cooled from 1250 K to 450 K. The heat released during this process is to be used as a source of energy. The ambient temperature is 303 K and specific heat of steel is 0.5 kJ/kg K. the available energy of this billet is

(a) 1.01 bar (b) 2.01 bar (c) 5.00 bar (d) 7.01 bar

55. A stainless steel tub (k_s = 19 W/mK) of 2 cm ID and 5 cm OD is insulated with 3 cm thick asbestos (k_a = 0.2 W/mK). If the temperature difference between the innermost and outermost surfaces is 600°C, the heat transfer rate per unit length is

(a) 0.94 W/m (b) 9.44 W/m

(c) 944.72 W/m (d) 9447.21 W/m

56. A spherical thermocouple junction of diameter 0.706 mm is to be used for the measurement of temperature of a gas stream. The convective heat transfer co-efficient on the bead surface is 400 W/m^2 K. Thermophysical properties of thermocouple material are k = 20 W/mK, C = 400 J/kg K and $\rho = 8500 kg/m^3$. If the thermocouple initially at 30°C is placed in a hot stream of 300°C, the time taken by the bead to reach 298°C, is

(a) 2.35 s (b) 4.9 s (c) 14.7 s (d) 29.4 s

57. In a condenser, water enters a 30°C and flows at the rate 1500 kg/hr. The condensing steam is at a temperature of 120°C and cooling water leaves the

ZOLLEGE.in

condenser at 80°C. Specific heat of water is 4.187 kJ/kg K. If the overall heat transfer coefficient is 2000 W/m^2 K, the heat transfer area is

(a) 0.707 m^2 (b) 7.07 m^2 (c) 70.7 m^2 (d) 141.4 m^2

58. During a Morse test on a 4 cylinder engine, the following measurements of brake power were taken at constant speed.

All cylinders firing	3037 kW
Number 1 cylinder not firing	2102 kW
Number 2 cylinder not firing	2102 kW
Number 3 cylinder not firing	2100 kW
Number 4 cylinder not firing	2098 kW

The mechanical efficiency of the engine is

(a) 91.53% (b) 85.07% (c) 81.07% (d) 61.22%

59. An engine working on air standard Otto cycle has a cylinder diameter of 10 cm and stroke length of 15 cm. The ratio of specific heats for air is 1.4. If the clearance volume is 196.3 cc and the heat supplied per kg of air per cycle is 1800 kJ/kg, the work output per cycle per kg of air is

(a) 879.1 kJ (b) 890.2 kJ (c) 895.3 kJ (d) 973.5 kJ

60. At a hydro electric power plant site, available head and flow rate are 24.5 m and 10.1 m^3/s respectively. If the turbine to be installed is required to run at 4.0 revolution per second (rps) with an overall efficiency of 90%, the suitable type of turbine for this site is

(a) Francis (b) Kaplan

(c) Pelton (d) Propeller

61. Dew point temperature of air at one atmospheric pressure (1.013 bar) is 18°C. The air dry bulb temperature is 30°C. The saturation pressure of water at 18°C and 30°C are 0.02062 bar and 0.04241 bar respectively. The specific heat of air and water vapour respectively are 1.005 and 1.88 kJ/kg K and the latent heat of vaporization of water at 0°C is 2500 kJ/kg. The specific humidity (kg/kg of dry air) and enthalpy (kJ/kg of dry air) of this moist air respectively, are

(a) 0.01051, 52.64 (b) 0.01291, 63.15

(c) 0.01481, 78.60 (d) 0.01532, 81.40

62. A R-12 refrigerant reciprocating compressor operates between the

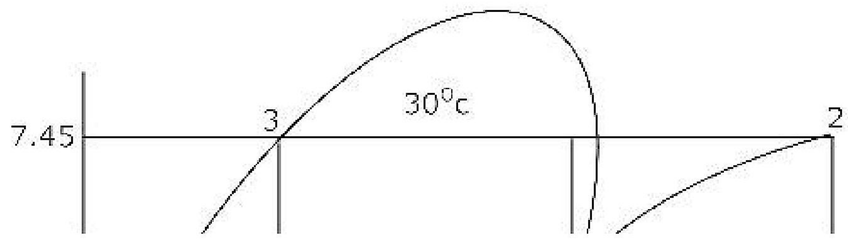

ZOLLEGE.in

condensing temperature of 30°C and evaporator temperature of −20°C. The clearance volume ratio of the compressor is 0.03. Specific heat ratio of the vapour is 1.15 and the specific volume at the suction is 0.1089 m^3/kg. Other properties at various states are given in the figure. To realize 2 Tons of refrigeration, the actual volume displacement rate considering the effect of clearance is

(a) 6.35×10^{-3} m^3/s
(b) 63.5×10^{-3} m^3/s
(c) 635×10^{-3} m^3/s
(d) 4.88×10^{-3} m^3/s

63. GO and No-GO plug gages are to be designed for a hole $20.000^{+0.050}_{-0.010}$ mm. Gage tolerances can be taken as 10% of the hole tolerance. Following ISO system of gage design, sizes of GO and NO-GO gage will be respectively

(a) 20.010 mm and 20.050 mm
(b) 20.014 mm and 20.046 mm
(c) 20.006 mm and 20.054 mm
(d) 20.014 mm and 20.054 mm

64. A standard machine tool and an automatic machine tool are being compared for the production of a component. Following data refers to the two machines.

	Standard Machine Tool	Automatic Machine Tool
Setup time	30 min.	2 hours
Machining time per piece	22 min.	5 min
Machine rate	Rs.200 per hour	Rs.800 per hour

The breakeven production batch size above which the automatic machine tool will be economical to use, will be

(a) 4
(b) 5
(c) 24
(d) 225

65. 10 mm diameter holes are to be punched in a steel sheet of 3 mm thickness. Shear strength of the material is 400 N/mm^2 and penetration is 40%. Shear provided on the punch is 2 mm. The blanking force during the operation will be

(a) 22.6 kN
(b) 37.7 kN
(c) 61.6 kN
(d) 94.3 kN

66. Through holes of 10 mm diameter are to be drilled in a steel plate of 20 mm thickness. Drill spindle speed is 300 rpm, feed 0.2 mm/rev and drill point

ZOLLEGE.in

angle is 120°. Assuming drill overtravel of 2 mm, the time for producing a hole will be

(a) 4 seconds (b) 25 seconds

(c) 100 seconds (d) 110 seconds

67. In a 2-D CAD package, clockwise circular arc of radius, 5, specified from $P_1(15,10)$ to $P_2(10,15)$ will have its center at

(a) (10, 10) (b) (15, 10) (c) (15, 15) (d) (10, 15)

68. Gray cast iron blocks 200 × 100 × 10 mm are to be cast in sand moulds. Shrinkage allowance for pattern making is 1%, The ratio of the volume of pattern to that of the casting will be

(a) 0.97 (b) 0.99 (c) 1.01 (d) 1.03

69. In an orthogonal cutting test on mild steel, the following data were obtained

Cutting speed	:	40 m/min
Depth of cut	:	0.3 mm
Tool rake angle	:	+ 5°
Chip thickness	:	1.5 mm
Cutting force	:	900 N
Thrust force	:	450 N

Using Merchant's analysis, the Friction angle during the machining will be

(a) 26.6° (b) 31.5° (c) 45° (d) 63.4°

70. In a rolling process, sheet of 25 mm thickness is rolled to 20 mm thickness. Roll is of diameter 600 mm and it rotates at 100 rpm. The roll strip contact length will be

(a) 5 mm (b) 39 mm (c) 78 mm (d) 120 mm

71. In a machining operation, doubling the cutting speed reduces the tool life to $\frac{1}{8}^{th}$ of the original value. The exponent n in Taylor's tool life equation $VT^n = C$, is

(a) $\frac{1}{8}$ (b) $\frac{1}{4}$ (c) $\frac{1}{3}$ (d) $\frac{1}{2}$

72. A soldering operation was work-sampled over two days (16 hours) during which an employee soldered 108 joints. Actual working time was 90% of the total time and the performance rating was estimated to be 120 percent. If the contract provides allowance of 20 percent of the total time available, the standard time for the operation would be

ZOLLEGE.in

(a) 8 min. (b) 8.9 min (c) 10 min. (d) 12 min.

73. An electronic equipment manufacturer has decided to add a component sub-assembly operation that can produce 80 units during a regular 8-hour shift. This operation consists of three activities as below

Activity	Standard time (min.)
M. Mechanical assembly	12
E. Electric wiring	16
T. Test	3

For line balancing the number of work stations required for the activities M, E and T would respectively be

(a) 2, 3, 1 (b) 3, 2,1
(c) 2, 4, 2 (d) 2, 1, 3

74. A maintenance service facility has Poisson arrival rates, negative exponential service time and operates on a 'first come first served' queue discipline. Breakdowns occur on an average of 3 per day with a range of zero to eight. The maintenance crew can service an average of 6 machines per day with a range of zero to seven.

The mean waiting time for an item to be serviced would be

(a) $\frac{1}{6}$ day (b) $\frac{1}{3}$ day (c) 1 day (d) 3 days

75. A company has an annual demand of 1000 units, ordering cost of Rs.100/order and carrying cost of Rs.100/unit –year. If the stock-out costs are estimated to be nearly Rs.400 each time the company runs out-of-stock, the safety stock justified by the carrying cost will be

(a) 4 (b) 20 (c) 40 (d) 100

76. A company produces two types of toys: P and Q. Production time of Q is twice that of P and the company has a maximum of 2000 time units per day. The supply of raw material is just sufficient to produce 1500 toys (of any type) per day. Toy type Q requires an electric switch which is available @ 600 pieces per day only. The company makes a profit of Rs.3 and Rs.5 on type P and Q respectively. For maximization of profits, the daily production quantities of P and Q toys should respectively be

(a) 100, 500 (b) 500, 100
(c) 800, 600 (d) 1000, 1000

77. Match the following

Type of Mechanism	Motion achieved
P. Scott – Russel mechanism	1. Intermittent motion

ZOLLEGE.in

Q. Geneva mechanism	2. Quick return motion
R. Off-set slider-crank mechanism	3. Simple harmonic motion
S. Scotch Yoke mechanism	4. Straight line motion

(a)	P-2	Q-3	R-1	S-4
(b)	P-3	Q-2	R-4	S-1
(c)	P-4	Q-1	R-2	S-3
(d)	P-4	Q-3	R-1	S-2

78. Match the following

Type of gears	Arrangement of shafts
P. Bevel gears	1. Non-parallel off-set shafts
Q. Worm gears	2. Non-parallel intersecting shafts
R. Herringbone gears	3. Non-parallel, non-intersecting shafts
S. Hypoid gears	4. Parallel shafts

(a)	P-4	Q-2	R-1	S-3	(b)	P-2	Q-3	R-4	S-1
(c)	P-3	Q-2	R-1	S-4	(d)	P-1	Q-3	R-4	S-2

ZOLLEGE.in

79. Match the following with respect to spatial mechanisms.

Type of Joint	Degree of constraint
P. Revolute	1. Three
Q. Cylindrical	2. Five
R. Spherical	3. Four
	4. Two
	5. Zero

(a)	P-4	Q-3	R-3	(b)	P-5	Q-4	R-3
(c)	P-2	Q-3	R-1	(d)	P-4	Q-5	R-3

ZOLLEGE.in

80. Match the following

P. Reciprocating pump	1. Plant with power output below 100 kW
Q. Axial flow pump	2. Plant with power output between 100 kW to MW
R. Microhydel plant	3. Positive displacement
S. Backward curved vanes	4. Draft tube
	5. High flow rate, low pressure ratio
	6. Centrifugal pump impeller

(a)	P-3	Q-5	R-6	S-2
(b)	P-3	Q-5	R-2	S-6
(c)	P-3	Q-5	R-1	S-6
(d)	P-4	Q-5	R-1	S-6

81. Match the following:

Feature to be inspected	Instrument
P. Pitch and Angle errors of screw thread	1. Auto Collimator
Q. Flatness error of a surface plate	2. Optical Interferometer
R. Alignment error of a machine slideway	3. Dividing Head and Dial Gauge
S. Profile of a cam	4. Spirit Level
	5. Sine bar
	6. Tool maker's Microscope

(a)	P-6	Q-2	R-4	S-6	(b)	P-5	Q-2	R-1	S-6
(c)	P-6	Q-4	R-1	S-3	(d)	P-1	Q-4	R-4	S-2

82. Match the following

Product	Process
P. Molded luggage	1. Injection molding
Q. Packaging containers for liquid	2. Hot rolling
R. Long structural shapes	3. Impact extrusion
S. Collapsible tubes	4. Transfer molding
	5. Blow molding
	6. Coining

(a)	P-1	Q-4	R-6	S-3	(b)	P-4	Q-5	R-2	S-3
(c)	P-1	Q-5	R-3	S-2	(d)	P-5	Q-1	R-2	S-2

ZOLLEGE.in

83. Typical machining operations are to be performed on hand-to-machine materials by using the processes listed below. Choose the best set of Operation-process combinations

Operation	Process
P. Deburring (internal surface)	1. Plasma Arc Machining
Q. Die sinking	2. Abrasive Flow Machining
R. Fine hole drilling in thin sheets	3. Electric Discharge Machining
S. Tool sharpening	4. Ultrasonic Machining
	5. Laser beam Machining
	6. Electrochemical Grinding

(a) P-1 Q-5 R-3 S-4 (b) P-1 Q-4 R-1 S-2
(c) P-5 Q-1 R-2 S-6 (d) P-2 Q-3 R-5 S-6

84. From the lists given below, choose the most appropriate set of heat treatment process and the corresponding process chracteristics

Process	Characteristics
P. Tempering	1. Austenite is converted into bainite
Q. Austempering	2. Austenite is converted into martensite
R. Martempering	3. Cementite is converted into globular structure
	4. Both hardness and brittleness are reduced
	5. Carbon is absorbed into the metal

(a) P-3 Q-1 R-5 (b) P-4 Q-3 R-2
(c) P-4 Q-1 R-2 (d) P-1 Q-5 R-4

Data for Q.85-86 are given below. *Solve the problems and choose correct answers.*

A steel beam of breadth 120 mm and height 750 mm is loaded as shown in the figure. Assume $E_{steel} = 200GPa$.

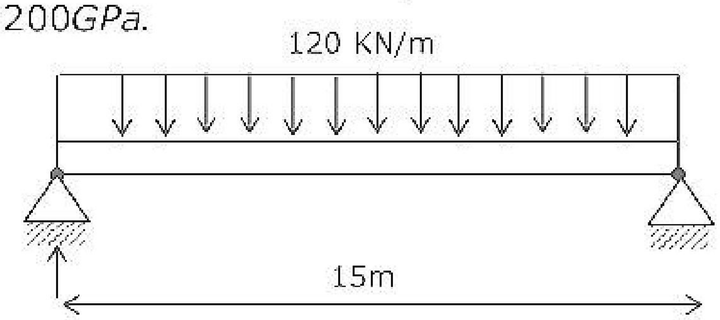

85. The beam is subjected to a maximum bending moment of

(a) 3375 kNm (b) 4750 kNm
(c) 6750 kNm (d) 8750 kNm

ZOLLEGE.in

86. The value of maximum deflection of the beam is

(a) 93.75 mm (b) 83.75 mm

(c) 73.75 mm (d) 63.75 mm

Data for Q.87-88 are given below. *Solve the problems and choose correct answers.*

A compacting machine shown in the figure below is used to create a desired thrust force by using a rack and pinion arrangement. The input gear is mounted on the motor shaft. The gears have involutes teeth of 2 mm module.

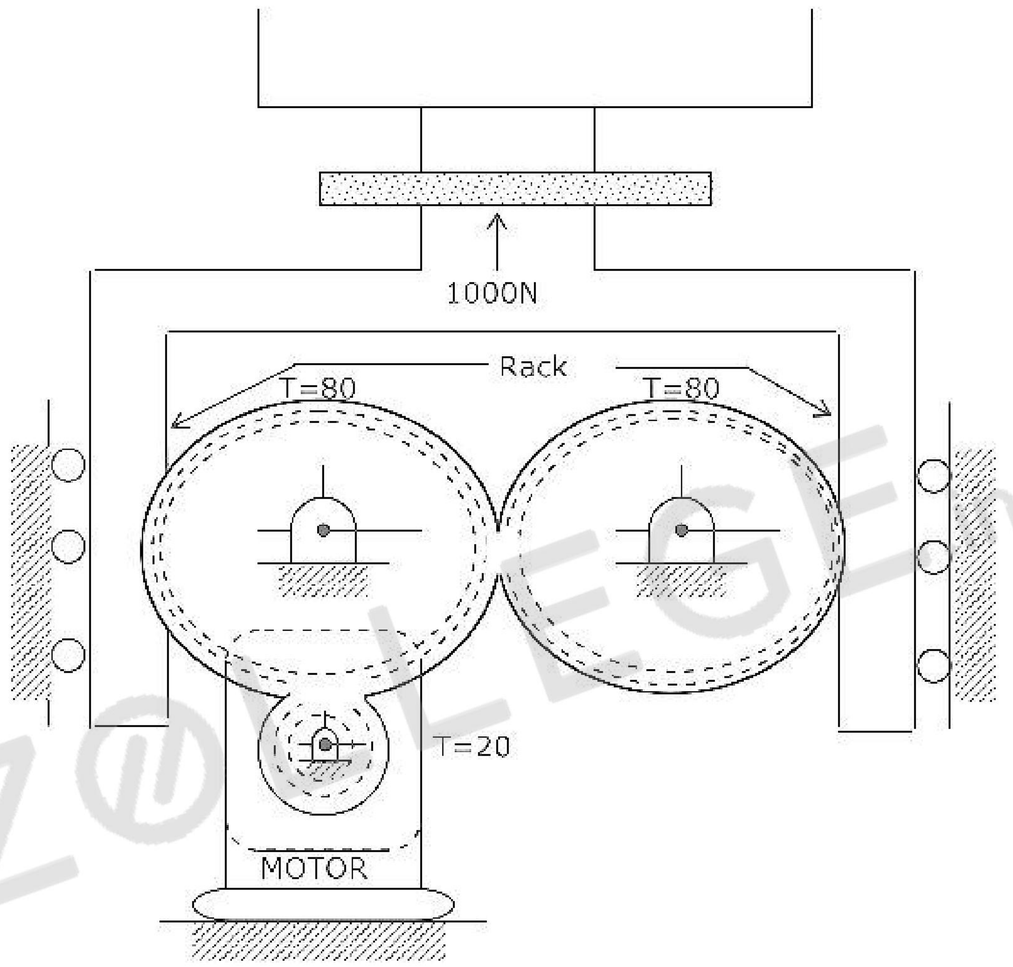

87. If the drive efficiency is 80%, the torque required on the input shaft to create 1000 N output thrust is

(a) 20 Nm (b) 25 Nm (c) 32 Nm (d) 50 Nm

88. If the pressure angle of the rack is 20°, the force acting along the line of action between the rack and the gear teeth is

(a) 250 N (b) 342 N (c) 532 N (d) 600 N

Data for Q. 89 and 90 are given below. *Solve the problem and choose correct answers.*

Consider a steam power plant using a reheat cycle as shown. Steam leaves the boiler and enters the turbine at 4 MPa, 350°C (h_3 = 3095

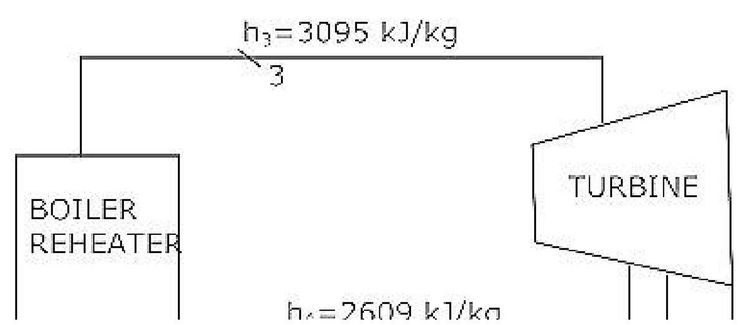

ZOLLEGE.in

kJ/kg). After expansion in the turbine to 400 kPa (h_4 = 2609 kJ/kg), the steam is reheated to 350°C (h_5 = 3170 kJ/kg), and then expanded in a low pressure turbine to 10 kPa (h_6 = 2165 kJ/kg). The specific volume of liquid handled by the pump can be assumed to be

89. The thermal efficiency of the plant neglecting pump work is

(a) 15.8% (b) 41.1% (c) 48.5% (d) 58.6%

90. The enthalpy at the pump discharge (h_2) is

(a) 0.33 kJ/kg (b) 3.33 kJ/kg

(c) 4.0 kJ/kg (d) 33.3 kJ/kg

ZOLLEGE.in

ZOLLEGE.in