SECTION - A

1. This question consists of TWENTY-FIVE sub-questions (1.1 – 1.25) of ONE mark each. For each of these sub-questions, four possible alternatives (A, B, C and D) are given, out of which ONLY ONE is correct. Indicate the correct answer by darkening the appropriate bubble against the question number on the left hand side of the Objective Response Sheet (ORS). You may use the answer book provided for any rough work, if needed.

1.1 The divergence of vector $\bar{r} = x\bar{i} + y\bar{j} + z\bar{k}$ is

(a) $\bar{i} + \bar{j} + \bar{k}$ (b) 3 (c) 0 (d) 1

1.2 Consider the system of equations given below:

$$x + y = 2$$
$$2x + 2y = 5$$

This system has

(a) one solution (b) no solution
(c) infinite solutions (d) four solutions

1.3 What is the derivative of $f(z) = |x|$ at $x = 0$?

(a) 1 (b) -1
(c) 0 (d) Does not exist

1.4 The Gauss divergence theorem relates certain

(a) surface integrals to volume integrals
(b) surface integrals to line integrals
(c) vector quantities to other vector quantities
(d) line integrals to volume integrals

1.5 For a spring-loaded roller-follower driven with a disc cam,

(a) the pressure angle should be larger during rise than that during return for ease of transmitting motion
(b) the pressure angle should be smaller during rise than that during return for ease of transmitting motion
(c) the pressure angle should be large during rise as well as during return for ease of transmitting motion
(d) the pressure angle does not affect the ease of transmitting motion

1.6 The shape of the bending moment diagram for a uniform cantilever beam carrying a uniformly distributed load over its length is

(a) a straight line (b) a hyperbola
(c) a ellipse (d) a parabola

ZOLLEGE.in

1.7 In the figure shown, the spring deflects by δ to position A (the equilibrium position) when a mass m is kept on it. During free vibration, the mass is at position B at some instant. The change in potential energy of the spring-mass system from position A to position B is

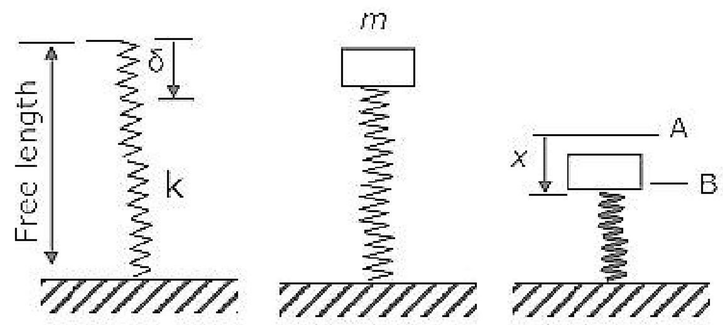

(a) $\frac{1}{2}kx^2$

(b) $\frac{1}{2}kx^2 - mgx$

(c) $\frac{1}{2}k(x+\delta)^2$

(d) $\frac{1}{2}kx^2 + mgx$

1.8 A particle P is projected from the earth surface at latitude 45° with escape velocity v=11.19 km/s. the velocity direction makes an angle α with the local vertical. The particle will escape the earth's gravitational field

(a) only when α = 0

(b) only when α = 45°

(c) only when α = 90°

(d) irrespective of the value of α

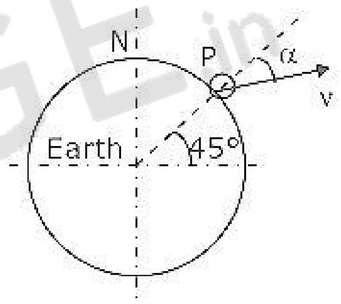

1.9 Bars AB and BC, each of negligible mass, support load P as shown in the figure. In this arrangement,

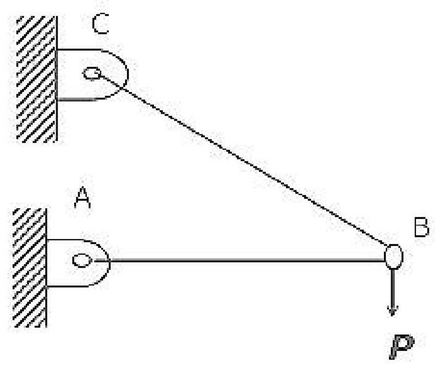

(a) bar AB is subjected to bending but bar BC is not subjected to bending

(b) bar AB is not subjected to bending but bar BC is subjected to bending

(c) neither bar AB nor bar BC is subjected to bending

(d) both bars AB and BC are subjected to bending

1.10 The area moment of inertia of a square of size 1 unit about its diagonal is

(a) $\frac{1}{3}$ (b) $\frac{1}{4}$ (c) $\frac{1}{12}$ (d) $\frac{1}{6}$

ZOLLEGE.in

1.11 Which of the following statement is correct?

(a) Flywheel reduces speed fluctuations during a cycle for a constant load, but flywheel does not control the mean speed of the engine if the load changes.

(b) Flywheel does not reduce speed fluctuation during a cycle for a constant load, but flywheel does not control the mean speed of the engine if the load changes.

(c) Governor controls speed fluctuations during a cycle for a constant load, but governor does not control the mean speed of the engine if the load changes.

(d) Governor controls speed fluctuations during a cycle for a constant load, and governor also control the mean speed of the engine if the load changes.

1.12 The SI unit of kinematic viscosity (ν) is

(a) m^2/sec (b) kg/(m-sec) (c) m/sec^2 (d) m^3/sec^2

1.13 A static fluid can have

(a) non-zero normal and shear stress

(b) negative normal stress and zero shear stress

(c) positive normal stress and zero shear stress

(d) zero normal stress and non-zero shear stress

1.14 A gas having a negative Joule-Thompson coefficient ($\mu < 0$), when throttled, will

(a) become cooler (b) become warmer

(c) remain at the same temperature

(d) either be cooler or warmer depending on the type of gas

1.15 Lumped heat transfer analysis of a solid object suddenly exposed to a fluid medium at a different temperature is valid when

(a) Biot number < 0.1 (b) Biot number > 0.1

(c) Fourier number < 0.1 (d) Fourier number > 0.1

1.16 The Rateau turbine belongs to the category of

(a) pressure compounded turbine (b) reaction turbine

(c) velocity compounded turbine (d) radial flow turbine

1.17 For the circular tube of equal length and diameter shown below, the view factor F_{13} is 0.17. the view factor F_{12} in this case will be

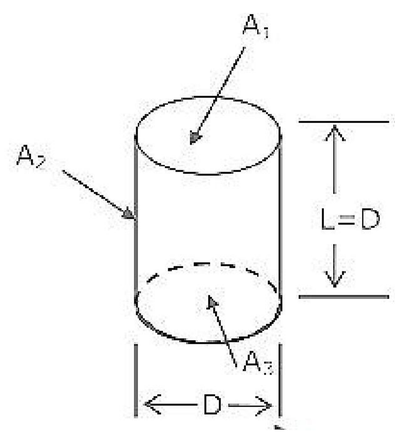

(a) 0.17

(b) 0.21

(c) 0.79

(d) 0.83

ZOLLEGE.in

1.18 In descending order of magnitude, the thermal conductivity of (a) pure iron, (b) liquid water, (c) saturated water vapour and (d) aluminum can be arranged as

(a) a b c d (b) b c a d (c) d a b c (d) d c b a

1.19. Shrinkage allowance on pattern is provided to compensate for shrinkage when

(a) the temperature of liquid metal drops from pouring to freezing temperature
(b) the metal changes from liquid to solid state at freezing temperature
(c) the temperature of solid phase drops from freezing to room temperature
(d) the temperature of metal drops from pouring to room temperature

1.20. The cutting force in punching and blanking operations mainly depends on

(a) the modulus of elasticity of metal (b) the shear strength of metal
(c) the bulk modulus of metal (d) the yield strength of metal

1.21. In ECM, the material removal is due to

(a) corrosion (b) erosion
(c) fusion (d) ion displacement

1.22. Two plates of the same metal having equal thickness are to be butt welded with electric arc. When the plate thickness changes, welding is achieved by

(a) adjusting the current (b) adjusting the duration of current
(c) changing the electrode size (d) changing the electrode coating

1.23. Allowance in limits and fits refers to

(a) maximum clearance between shaft and hole
(b) minimum clearance between shaft and hole
(c) difference between maximum and minimum size of hole
(d) difference between maximum and minimum size of shaft

1.24. Production flow analysis (PFA) is a method of identifying part families that uses data from

(a) engineering drawings (b) production schedule
(c) bill of materials (d) route sheets

1.25 When using a simple moving average to forecast demand, one would

(a) give equal weight to all demand data
(b) assign more weight to the recent demand data
(c) include new demand data in the average without discarding the earlier data
(d) include new demand data in the average after discarding some of the earlier demand data

ZØLLEGE.in

2. This question consists of TWENTY-FIVE sub-questions (2.1 – 2.25) of TWO marks each. For each of these sub-questions, four possible alternatives (A, B, C and D) are given, out of which ONLY ONE is correct. Indicate the correct answer by darkening the appropriate bubble against the question number on the left hand side of the Objective Response Sheet (ORS). You may use the answer book provided for any rough work, if needed.

2.1 The minimum point of the function $f(x) = \left(x^3/3\right) - x$ is at

(a) x = 1 (b) x = -1 (c) x = 0 (d) $x = \frac{1}{\sqrt{3}}$

2.2. The rank of a 3 × 3 matrix C (= AB), found by multiplying a non-zero column matrix A of size 3 × 1 and a non-zero row matrix B of size 1 × 3, is

(a) 0 (b) 1 (c) 2 (d) 3

2.3. An unbiased coin is tossed three times. The probability that the head turns up in exactly two cases is

(a) $\frac{1}{9}$ (b) $\frac{1}{8}$ (c) $\frac{2}{3}$ (d) $\frac{3}{8}$

2.4. Two helical tensile springs of the same material and also having identical mean coil diameter and weight, have wire diameters d and $\frac{d}{2}$. The ratio of their stiffness is

(a) 1 (b) 4 (c) 64 (d) 128

2.5. The maximum principal stress for the stress state shown in the figure is

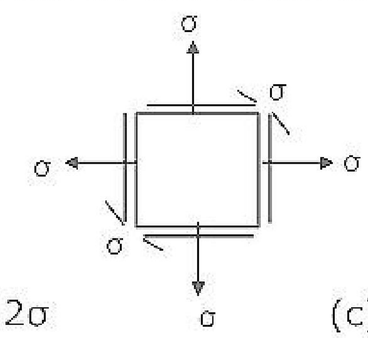

(a) σ (b) 2σ (c) 3σ (d) 1.5σ

2.6. The sun gear in the figure is driven clockwise at 100 rpm. The ring gear is held stationary. For the number of teeth shown on the gears, the arm rotates at

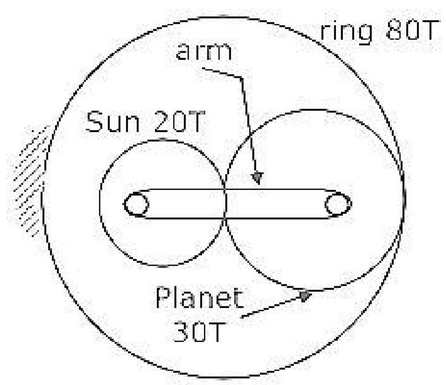

(a) 0 rpm (b) 20 rpm (c) 33.33 rpm (d) 66.67 rpm

ZOLLEGE.in

2.7. For the loading on truss shown in the figure, the force in member CD is

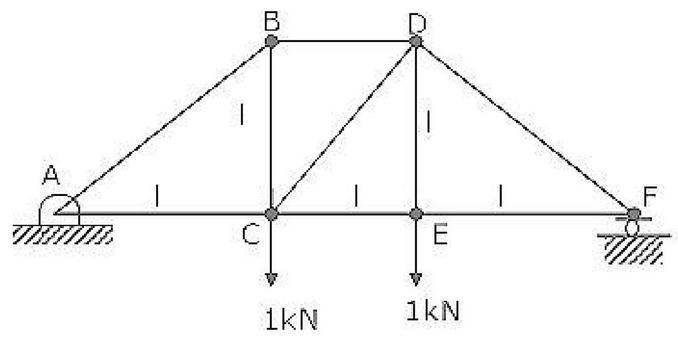

(a) 0 kN (b) 1 kN (c) $\sqrt{2}$ kN (d) $\frac{1}{\sqrt{2}}$ kN

2.8. Bodies 1 and 2 shown in the figure have equal mass m. All surfaces are smooth. The value of force P required to prevent sliding of body 2 on body 1 is

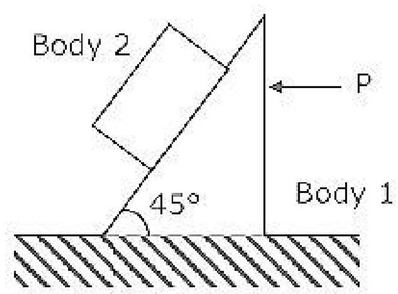

(a) P = 2mg (b) P = $\sqrt{2}$ mg (c) P = $2\sqrt{2}$ mg (d) P = mg

2.9. The assembly shown in the figure is composed of two massless rods of length l with two particles, each of mass m. the natural frequency of this assembly for small oscillations is

(a) $\sqrt{\frac{g}{l}}$

(b) $\sqrt{\frac{2g}{(l\cos\alpha)}}$

(c) $\sqrt{\frac{g}{(l\cos\alpha)}}$

(d) $\sqrt{\frac{(g\cos\alpha)}{l}}$

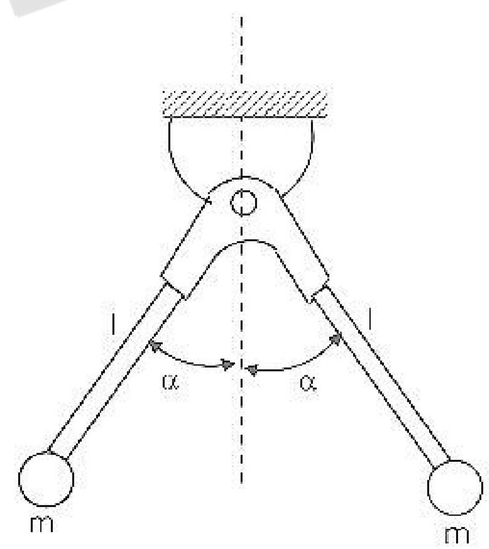

2.10. Mass M slides in a frictionless slot in the horizontal direction and the bob of mass m is hinged to mass M at C, through a rigid massless rod. This system is released from rest with θ =30°. At the instant when θ = 0, the velocities of m and M can be determined using the fact that, for the system (i.e., m and M together),

(a) the linear momentum in x and y directions are conserved but the energy is not conserved

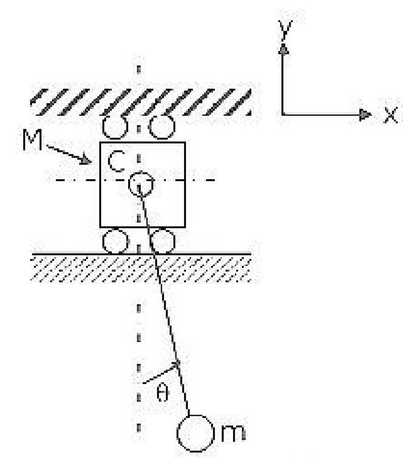

ZOLLEGE.in

(b) the linear momentum in x and y directions are conserved and the energy is also conserved

(c) the linear momentum in x direction is conserved and the energy is also conserved

(d) the linear momentum in y direction is conserved and the energy is also conserved

2.11. A cyclic heat engine does 50 kJ of work per cycle. If the efficiency of the heat engine is 75%, the heat rejected per cycle is

(a) $16\frac{2}{3}kJ$ (b) $33\frac{1}{3}kJ$ (c) $37\frac{1}{2}kJ$ (d) $66\frac{2}{3}kJ$

2.12. A single-acting two-stage compressor with complete intercooling delivers air at 16 bar. Assuming an intake state of 1 bar at 15°C, the pressure ratio per stage is

(a) 16 (b) 8 (c) 4 (d) 2

2.13. The horizontal and vertical hydrostatic forces F_x and F_y on the semi-circular gate, having a width ω into the plane of figure, are

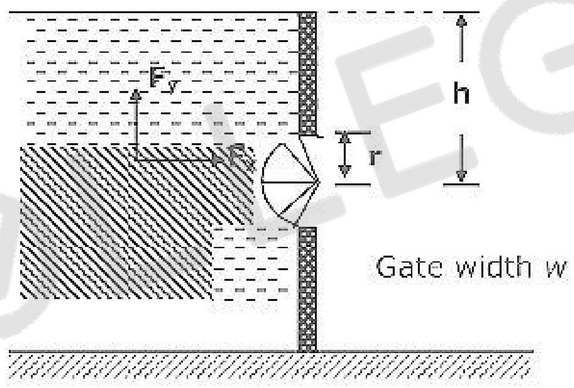

(a) $F_x = \rho ghr\omega$ and $F_y = 0$ (b) $F_x = 2\rho ghr\omega$ and $F_y = 0$

(c) $F_x = \rho ghr\omega$ and $F_y = \rho g\omega r^2/2$ (d) $F_x = 2\rho ghr\omega$ and $F_y = \pi\rho g\omega r^2/2$

2.14. The 2-D flow with velocity $\vec{v} = (x+2y+2)\vec{i} + (4-y)\vec{j}$ is

(a) compressible and irrotational (b) compressible and not irrotational

(c) incompressible and irrotational

(d) incompressible and not irrotational

2.15. A small steam whistle (perfectly insulated and doing no shaft work) causes a drop of 0.8 kJ/kg in the enthalpy of steam from entry to exit. If the kinetic energy of the steam at entry is negligible, the velocity of the steam at exit is

(a) 4 m/s (b) 40 m/s (c) 80 m/s (d) 120 m/s

ZOLLEGE.in

2.16. For air at a given temperature, as the relative humidity is increased isothermally,

(a) the wet bulb temperature and specific enthalpy increase

(b) the wet bulb temperature and specific enthalpy decrease

(c) the wet bulb temperature increases and specific enthalpy decreases

(d) the wet bulb temperature decreases and specific enthalpy increases

2.17. Water (Prandtl number . 6) flows over a flat plate which is heated over the entire length. Which one of the following relationship between the hydrodynamic boundary layer thickness (δ) and the thermal boundary layer thickness (δ_t) is true?

(a) $\delta_t > \delta$ (b) $\delta_t < \delta$ (c) $\delta_t = \delta$

(d) Cannot be predicted

2.18. In a spark ignition engine working on the ideal Otto cycle, the compression ratio is 5.5. The work output per cycle (i.e., area of the P-V diagram) is equal to $23.625\times10^5\times V_c$J, where V_c is the clearance volume in m^3. The indicated mean effective pressure is

(a) 4.295 bar (b) 5.250 bar

(c) 86.870 bar (d) 106.300 bar

2.19. The height of the down-sprue is 175 mm and its cross-sectional area at the base is 200 mm^2. The cross-sectional area of the horizontal runner is also 200 mm^2. assuming no losses, indicate the correct choice for the time (in seconds) required to fill a mold cavity of volume 10^6 mm^3. (Use g = 10 m/s^2).

(a) 2.67 (b) 8.45 (c) 26.72 (d) 84.50

2.20. For rigid perfectly plastic work material, negligible interface friction and no redundant work, the theoretically maximum possible reduction in the wire drawing operation is

(a) 0.36 (b) 0.63 (c) 1.00 (d) 2.72

2.21. During orthogonal cutting of mild steel with a 10° rake angle tool the chip thickness ratio was obtained as 0.4. the shear angle (in degrees) evaluated from this data is

(a) 6.53 (b) 20.22 (c) 22.94 (d) 50.00

2.22. Resistance spot welding is performed on two plates of 1.5 mm thickness with 6 mm diameter electrode, using 15000 A current for a time duration of 0.25 seconds. Assuming the interface resistance to be 0.0001Ω, the heat generated to form the weld is

(a) 5625 W-sec (b) 8437 W-sec

(c) 22500 W-sec (d) 33750 W-sec

ZOLLEGE.in

2.23. Fifty observations of a production operation revealed a mean cycle time of 10 min. the worker was evaluated to be performing at 90% efficiency. Assuming the allowances to be 10% of the normal time, the standard time (in seconds) for the job is

(a) 0.198 (b) 7.3 (c) 9.0 (d) 9.9

2.24. 3-2-1 method of location in a jig or fixture would collectively restrict the work piece in n degrees of freedom, where the value of n is

(a) 6 (b) 8 (c) 9 (d) 12

2.25. In an NC machining operation, the tool has to be moved from point (5,4) to point (7,2) along a circular path with center at (5,2). Before starting the operation, the tool is at (5,4). The correct G and M code for this motion is

(a) N010 G03 X7.0 Y2.0 I5.0 J2.0 (b) N010 G02 X7.0 Y2.0 I5.0 J2.0

(c) N010 G01 X7.0 Y2.0 I5.0 J2.0 (d) N010 G00 X7.0 Y2.0 I5.0 J2.0

SECTION – B

This section consists of TWENTY questions of FIVE marks each. Attempt ANY FIFTEEN questions. Answers must be given in the answer book provided.

3. Solve the differential equation,

$$\frac{d^2y}{dx^2} + y = x$$

with the following conditions:

(i) at $x = 0$, $y = 1$

(ii) at $x = \frac{\pi}{2}$, $y = \frac{\pi}{2}$

4. The figure shows an electric motor driving a machine under steady conditions by means of three straight tooth spur gears having 25, 32 and 26 teeth. The diametral pitch is 4 teeth/cm and the pressure angle is 20°. For the direction of motor rotation shown, determine the radial load acting on the shaft carrying the idler.

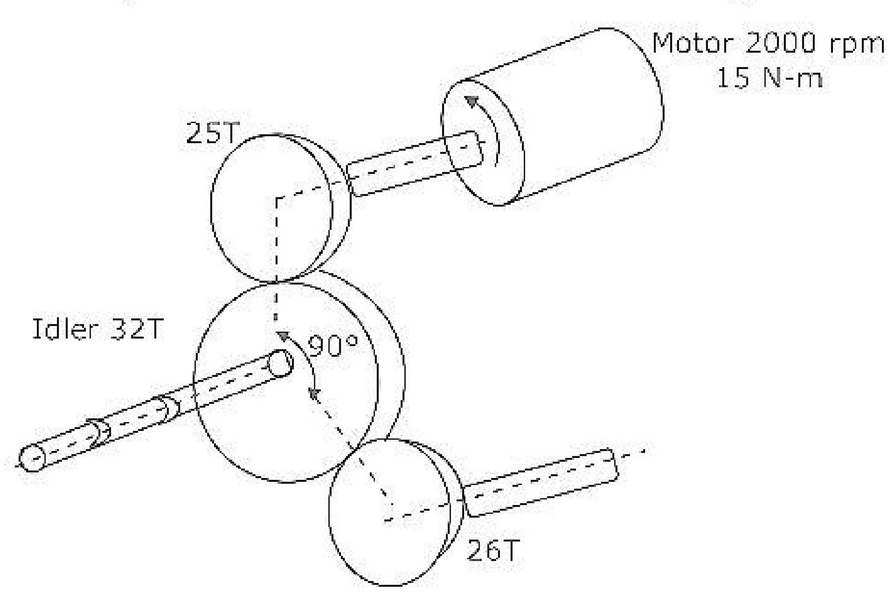

ZOLLEGE.in

5. Water (ρ = 1000 kg/m^3) flows horizontally through a nozzle into the atmosphere under the conditions given below. (assume steady state flow).

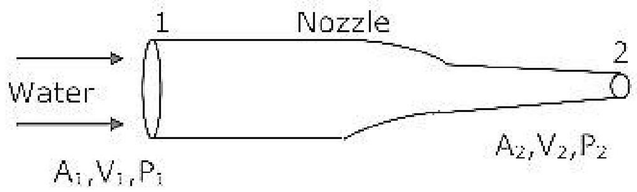

At inlet: $A_1 = 10^{-3} m^2$; V_1 = 2m/sec; $P_1 = 3\times10^5$ Pa(gauge)

At outlet: $A_1 = 10^{-4} m^2$; $P_2 = P_{atm}$

Determine the external horizontal force needed to keep the nozzle in place.

6. A number of cold rolling passes are required in a two-high rolling mill to reduce the thickness of a plate from 50 mm to 25 mm. The roll diameter is 700 mm and the coefficient of friction at the roll work interface is 0.1. it is required that the draft in each pass must be the same. Assuming no front and back tensions, determine (a) the minimum number of passes required and (b) the draft in each pass.

7. Steam at 300 kPa and 500°C (h = 3486.0 kJ/kg) enters a steam turbine and exits at atmospheric pressure and 350°C (h = 3175.8 kJ/kg). Heat losses in the turbine are 50 kW and the mass flow rate is 0.25 kg/s. determine the power output of the turbine if kinetic energy losses are negligible.

8. Two solid workpieces, (i) a sphere with radius R and (ii) a cylinder with diameter equal to its height, have to be sand cast. Both work-pieces have the same volume. Show that the cylindrical work-piece will solidify faster than the spherical work-piece.

9. A spring mass dashpot system is shown in the figure. The spring stiffness is k, mas is m, and the viscous damping coefficient is c. the system is subjected to a force $f_o \cos\omega t$ as shown. Write the equations of motion which are needed to determine x. (No need to determined x.)

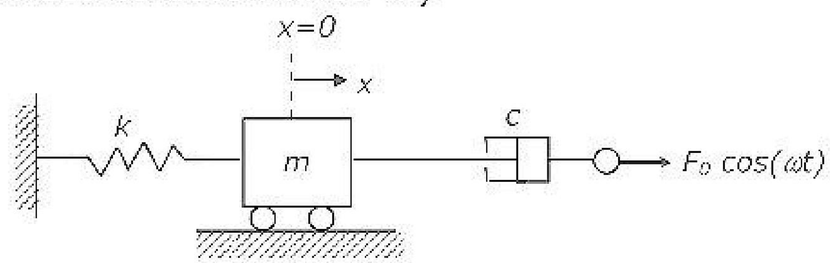

10. A four-stroke engine develops 18.5 kW at 250 rpm. The turning moment diagram is rectangular for both expansion and compression strokes. The turning moment is negative during compression stroke and is zero during suction and exhaust strokes. The turning moment for the expansion stroke is 2.8 times that of the compression stroke. Assuming constant load, determine the moment of inertia of the flywheel to keep the total fluctuation of the crankshaft speed within 1% of the average speed of 250 rpm.

ZOLLEGE.in

11. Use the area moment method to find the vertical deflection of the uniform beam AB at the following points:

(a) middle of the beam (point O)

(b) left end of the beam (point A)

The flexural rigidity of the beam is EI.

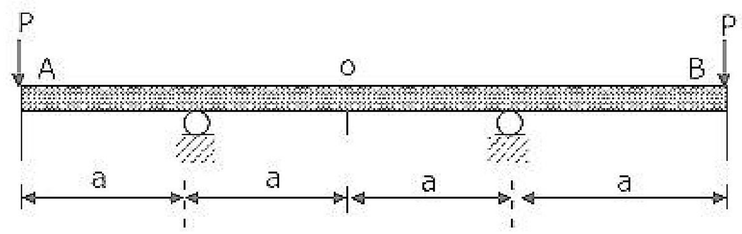

12. Tool life testing on a lathe under dry cutting conditions gave n and C of Taylor tool life equation as 012 and 130 m/min, respectively. When a coolant was used, C increased by 10%. Find the percent increase in tool life with the use of coolant at a cutting speed of 90 m/min.

13. Identical straight turning operation was carried out using two tools: 8-8-5-5-5-25-0 (ASA) and 8-8-5-5-7-30-0 (ASA). Show that the first tool will give better surface finish in terms of peak-to-valley height.

14. Water flows through a 0.6 m diameter, 1000 m long pipe from a 30 m overhead tank to a village. Find the discharge (in liters) at the village (at ground level), assuming a Fanning friction factor f = 0.04 and ignoring minor losses due to bends etc.

15. A composite wall, having unit length normal to the plane of paper, is insulated at the top and bottom as shown in the figure. It is comprised of four different materials A, B, C and D.

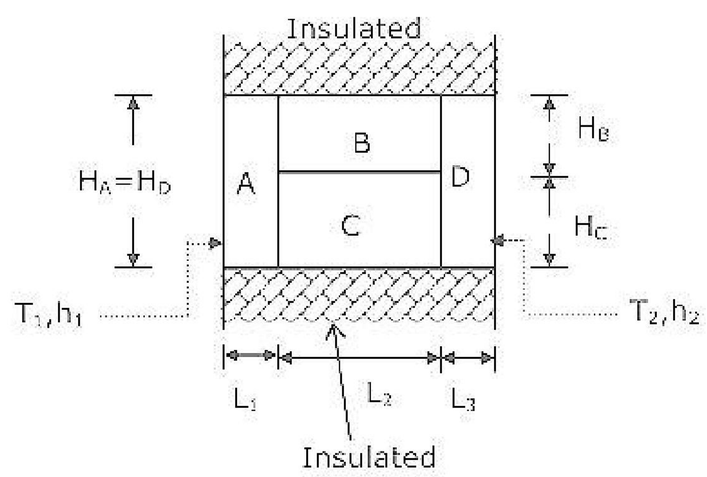

The dimensions are: $H_A = H_D = 3m$, $H_B = H_C = 1.5$ m, $L_1 = L_3 = 0.05m$, $L_2 = 0.1$ m

The thermal conductivity of the materials are: $K_A = K_D = 50$ W/m-K, $K_B = 10$W/m-k, $K_C = 1$ W/m-k.

The fluid temperatures and heat transfer coefficients (see figure) are: $T_1 = 200°C$, $h_1 = 50$ W/m^2-K, $T_2 = 25°C$, $h_2 = 10$ W/m^2-K.

ZOLLEGE.in

Assuming one-dimensional conduction,

(a) sketch the thermal circuit of the system, and

(b) determine the rate of heat transfer through the wall.

16. A Brayton cycle (air standard) has a pressure ratio of 4 and inlet conditions of one standard atmosphere pressure and 27°C. Find the air flow rate required for 100 kW power output if the maximum temperature in the cycle is 1000°C. Assume γ=1.4 and C_p = 1.0 kJ/kg-K.

17. A Francis turbine running at 200 rpm develops a power of 5000 kW under a head of 25 m. determine the speed and power output under a head of 100 m.

18. A belt drive shown in Figure (a) has an angle of wrap of 160° on the smaller pulley. Adding an idler as shown in Figure (b), increases the wrap angle to 200°. The slack side tension is the same in both cases and the centrifugal force is negligible. By what percentage is the torque capacity of the belt drive increased by adding the idler? (use coefficient of friction μ = 0.3.)

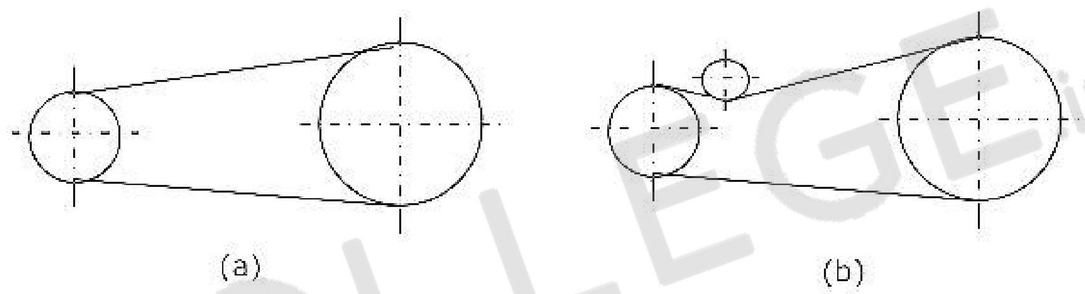

19. The 2 kg mass C moving horizontally to the right, with a velocity of 5 m/s, strikes the 8 kg mass B at the lower end of the rigid massless rod AB. The rod is suspended from a frictionless hinge at A and is initially at rest. If the coefficient of restitution between mass C and mass B is one, determine the angular velocity of the rod AB immediately after impact.

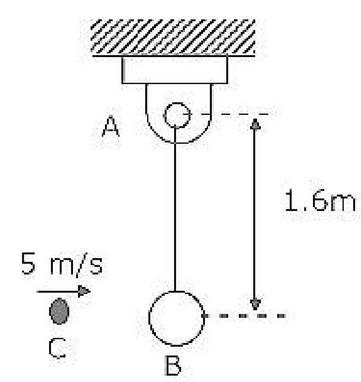

20. A mechanic has an engine from a 1970 model car which works on the basis of Otto cycle. The engine displaces 1.8 liters, has a compression ratio of 10.2:1 and has six cylinders. The pistons in the original engine are 120 mm in diameter. The mechanic bores the cylinder and replaces the piston with new pistons that are 2 mm larger in diameter than the originals. (a) Keeping all other factors same, what will be the percentage change in power output? (b) By what percentage will the engine efficiency change?

ZOLLEGE.in

21. A company is offered the following price breaks for order quantity

Order quantity	Price (Rs.)
0 – 100	150
101 and above	100

Order cost is Rs.60 per order while the holding cost is 10% of the purchase price. Determine the economic order quantity (EOQ) if the annual requirement is 1000 units.

22. The shaft shown is supported on bearings at A and B. This shaft carries three eccentric masses (each of mass m) in planes parallel to x-y plane at C, D and E. the eccentricity of mass at C is e and eccentricity of masses at D and E is $\frac{e}{\sqrt{2}}$. the shaft rotates at speed ω. In the figure, θ_D and θ_E indicate the angular positions of masses at D and E in x-y plane with respect to that of mass at C. Neglecting gravity effect, determine θ_D and θ_E to provide static balance. Also determine the ratio of magnitudes of dynamic bearing reactions at A and B for the obtained values of θ_D and θ_E.

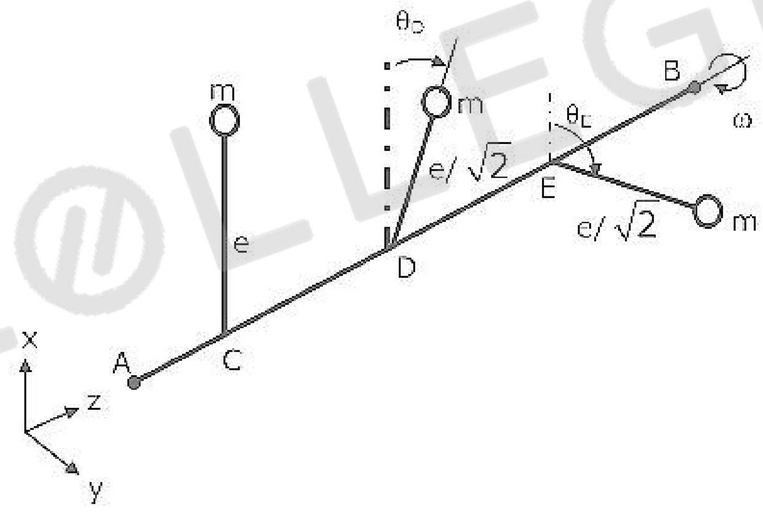

ZOLLEGE.in