SECTION - A

1. Write in your answer book the correct or the most appropriate answer to the following multiple choice questions by writing the corresponding letter a, b, c or d against the sub-question number.

1.1 Let A and B be sets and let A^c and B^c denote the complements of the sets A and B. the set $(a - b) \cup (b-a) \cup (a \cap b)$ is equal to.

(a) $A \cup B$ (b) $A^c \cup B^c$ (c) $A \cap B$ (d) $A^c \cap B^c$

1.2 Let X = {2,3,6,12,24}, Let ≤ be the partial order defined by X ≤ Y if x divides y. Number of edge as in the Hasse diagram of (X,≤) is

(a) 3 (b) 4

(c) 9 (d) None of the above

1.3 Suppose X and Y are sets and $|X|$ and $|Y|$ are their respective cardinalities. It is given that there are exactly 97 functions from X to Y. from this one can conclude that

(a) $|X| = 1, |Y| = 97$ (b) $|X| = 97, |Y| = 1$

(c) $|X| = 97, |Y| = 97$ (d) None of the above

1.4 Which of the following statements is false?

(a) The set of rational numbers is an abelian group under addition.

(b) The set of integers in an abelian group under addition.

(c) The set of rational numbers form an abelian group under multiplication.

(d) The set of real numbers excluding zero in an abelian group under multiplication.

1.5 Two dice are thrown simultaneously. The probability that at least one of them will have 6 facing up is

(a) $\frac{1}{36}$ (b) $\frac{1}{3}$ (c) $\frac{25}{36}$ (d) $\frac{11}{36}$

1.6 The formula used to compute an approximation for the second derivative of a function f at a point X_0 is.

(a) $\frac{f(x_0+h)+f(x_0-h)}{2}$ (b) $\frac{f(x_0+h)-f(x_0-h)}{2h}$

(c) $\frac{f(x_0+h)+2f(x_0)+f(x_0-h)}{h^2}$ (d) $\frac{f(x_0+h)-2f(x_0)+f(x_0-h)}{h^2}$

ZOLLEGE.in

1.7 Let Ax = b be a system of linear equations where A is an $m \times n$ matrix and b is a $m \times 1$ column vector and X is a $n \times 1$ column vector of unknows. Which of the following is false?

(a) The system has a solution if and only if, both A and the augmented matrix [A b] have the same rank.

(b) If $m < n$ and b is the zero vector, then the system has infinitely many solutions.

(c) If m = n and b is non-zero vector, then the system has a unique solution.

(d) The system will have only a trivial solution when m = n, b is the zero vector and rank (A) = n.

1.8 Which two of the following four regular expressions are equivalent? (ε is the empty string).

(i) $(00)^* (\varepsilon + 0)$

(ii) $(00)^*$

(iii) 0^*

(iv) $0(00)^*$

(a) (i) and (ii) (b) (ii) and (iii) (c) (i) and (iii) (d) (iii) and (iv)

1.9 Which of the following statements is false?

(a) The Halting problem of Turing machines is undecidable.

(b) Determining whether a context-free grammar is ambiguous is undecidbale.

(c) Given two arbitrary context-free grammars G_1 and G_2 it is undecidable whether $L(G_1) = L(G_2)$.

(d) Given two regular grammars G_1 and G_2 it is undecidable whether $L(G_1) = L(G_2)$.

1.10 Let $L \subseteq \Sigma^*$ where $\Sigma = \{a, b\}$. which of the following is true?

(a) $L = \{x \mid x \text{ has an equal number of a's and b's}\}$ is regular

(b) $L = \{a^n b^n \mid n \geq 1\}$ is regular

(c) $L = \{x \mid x \text{ has more a's and b's}\}$ is regular

(d) $L = \{a^m b^n \mid m \geq, n \geq 1\}$ is regular

1.11 Which of the following is false?

(a) $100n\log = \left(\frac{n\log n}{100}\right)$ (b) $\sqrt{\log n} = 0(\log\log n)$

(c) If $0 < x < y$ then $n^x = 0(n^y)$ (d) $2n = 0(n^k)$

ZOLLEGE.in

1.12 Consider the following statements:

(i) First-in-first out types of computations are efficiently supported by STACKS.

(ii) Implementing LISTS on linked lists is more efficient than implementing LISTS on an array for almost all the basic LIST operations.

(iii) Implementing QUEUES on a circular array is more efficient than implementing QUEUES on a linear array with two indices.

(iv) Last-in-first-out type of computations are efficiently supported by QUEUES.

(a) (ii) and (iii) are true (b) (i) and (ii) are true

(c) (iii) and (iv) are true (d) (ii) and (iv) are true

1.13 An advantage of chained hash table (external hashing) over the open addressing scheme is

(a) Worst case complexity of search operations is less?

(b) Space used is less (c) Deletion is easier

(d) None of the above

1.14 In the balanced binary tree in Fig.1.14 given below, how many nodes will become unbalanced when a node is inserted as a child of the node "g"?

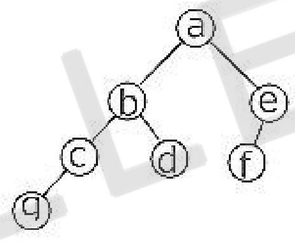

(a) 1 (b) 3 (c) 7 (d) 8

1.15 Which of the following sequences denotes the post order traversal sequence of the tree of question 1.14?

(a) f e g c d b a (b) g c b d a f e (c) g c d b f e a (d) f e d g c b a

1.16 Relative mode of addressing is most relevant to writing

(a) coroutines (b) position – independent code

(c) shareable code (d) interrupt handlers

1.17 The pass numbers for each of the following activities

(i) object code generation

(ii) literals added to literal table

(iii) listing printed

(iv) address resolution of local symbols that occur in a two pass assembler respectively are

(a) 1 2 1 2 (b) 2 1 2 1 (c) 2 1 1 2 (d) 1 2 2 2

ZOLLEGE.in

1.18 The process state transition diagram in Fig.1.8 is representative of

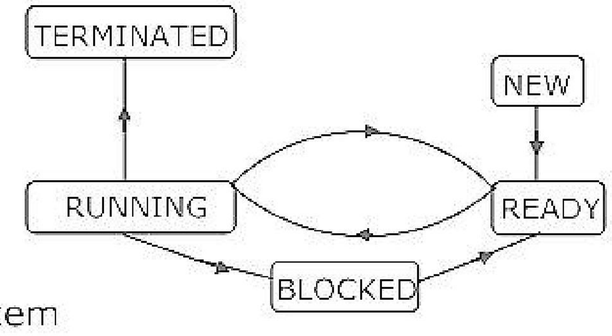

(a) a batch operating system
(b) an operating system with a preemptive scheduler
(c) an operating system with a non-preemptive scheduler
(d) a uni-programmed operating system.

1.19. A critical section is a program segment
(a) which should run in a certain specified amount of time
(b) which avoids deadlocks
(c) where shared resources are accessed
(d) which must be enclosed by a pair of semaphore operations, P and V

1.20. Which of the following is an example of spooled device?
(a) A line printer used to print the output of a number of jobs.
(b) A terminal used to enter input data to a running program.
(c) A secondary storage device in a virtual memory sytem.
(d) A graphic display device.

1.21. A ROM is sued to store the table for multiplication of two 8-bit unsigned integers. The size of ROM required is
(a) 256×16 (b) $64\ K \times 8$ (c) $4\ K \times 16$ (d) $64\ K \times 16$

1.22. Number of machine cycles required for RET instruction in 8085 microprocessor is
(a) 1 (b) 2 (c) 3 (d) 5

1.23. Both's algorithm for integer multiplication gives worst performance when the multiplier pattern is
(a) 101010 .....1010 (b) 100000 0001
(c) 111111 .....1111 (d) 011111 1110

ZOLLEGE.in

1.24. For the daisy chain scheme of connecting I/O devices, which of the following statements is true?

(a) It gives non-uniform priority to various devices.

(b) It gives uniform priority to all devices.

(c) It is only useful for connecting slow devices to a processor device.

(d) It requires a separate interrupt pin on the processor for each device.

1.25 Consider the following floating-point number representation.

31 — 24	23 — 0
Exponent	Mantissa

The exponent is in 2's complement representation and mantissa is in the sign magnitude representation. The range of the magnitude of the normalized numbers in this representation is

(a) 0 to 1

(b) 0.5 to 1

(c) 2^{-23} to 0.5

(d) 0.5 to $\left(1-2^{-23}\right)$

2. Write in your answer book the correct or the most appropriate answer to the following multiple choice questions by writing the corresponding letter a, b, c or d against the sub-question number.

2.1 Let R denotes the set of real numbers. Let $f:R\times R \rightarrow R\times R$ be a bijective function defined by $f(x,y)=(x+y,x-y)$. the inverse function of f is given by

(a) $f^{-1}(x,y)=\left(\frac{1}{x+y},\frac{1}{x-y}\right)$

(b) $f^{-1}(x,y)=(x-y,x+y)$

(c) $f^{-1}(x,y)=\left(\frac{x+y}{2},\frac{x-y}{2}\right)$

(d) $f^{-1}(x,y)=\left[2(x-y),2(x+y)\right]$

2.2. Let R be a non-empty relation on a collection of sets defined by A R B if and only if $A \cap B = \phi$. Then, (pick the true statement)

(a) R is reflexive and transitive

(b) R is symmetric and not transitive

(c) R is an equivalence relation

(d) R is not reflexive and not symmetric

ZOLLEGE.in

2.3. Which of the following is false? Read $\wedge$ as AND, $\vee$ as OR, $\sim$ as NOT, $\rightarrow$ as one way implication and $\leftrightarrow$ as two way implication.

(a) $((x \rightarrow y) \wedge x) \rightarrow y$

(b) $((\sim x \rightarrow y) \wedge (\sim x \wedge \sim y)) \rightarrow x$

(c) $(x \rightarrow (x \vee y))$

(d) $((x \vee y) \leftrightarrow (\sim x \rightarrow \sim y))$

2.4. Which one of the following is false?

(a) The set of all bijective functions on a finite set forms a group under function composition.

(b) The set {1,2, ..., p −1} forms a group under multiplication mod p where p is a prime number.

(c) The set of all strings over a finite alphabet forms a group under concatenation.

(d) A subset $s \neq \phi$ of G is a subgroup of the group <G, *> if and only if for any pair of elements $a, b \in s$, $a * b^{-1} \in s$.

2.5. Newton-Raphson iteration formula for finding $3\sqrt{c}$, where $c > 0$ is,

(a) $x_{n+1} = \dfrac{2x_n^3 + 3\sqrt{c}}{3x_n^2}$

(b) $x_{n+1} = \dfrac{2x_n^3 - 3\sqrt{c}}{3x_n^2}$

(c) $x_{n+1} = \dfrac{2x_n^3 + c}{3x_n^2}$

(d) $x_{n-1} = \dfrac{2x_n^3 - c}{3x_n^2}$

2.6. The matrices $\begin{bmatrix} \cos\theta & -\sin\theta \\ \sin\theta & \cos\theta \end{bmatrix}$ and $\begin{bmatrix} a & 0 \\ 0 & b \end{bmatrix}$ commute under multiplication

(a) if a = b or $\theta = n\pi$, is an integer

(b) always

(c) never

(d) if $a \cos\theta \neq b \sin\theta$

2.7. The probability that top and bottom cards of a randomly shuffled deck are both aces in

(a) $\frac{4}{52} \times \frac{4}{52}$

(b) $\frac{4}{52} \times \frac{3}{52}$

(c) $\frac{4}{52} \times \frac{3}{51}$

(d) $\frac{4}{52} \times \frac{4}{51}$

2.8. If L_1 and L_2 are context free languages and R a regular set, one of the languages below is not necessarily a context free language. Which one?

(a) L_1, L_2

(b) $L_1 \cap L_2$

(c) $L_1 \cap R$

(d) $L_1 \cup L_2$

ZOLLEGE.in

2.9. Define a context free languages L ≤ {0,1} init (L) = {u/uv ∈ L for some v in {{0,1}} (in other words, init(L) is the set of prefixes of L)

Let L {w/w is nonempty and has on equal number of 0's and 1's

Then init (L) is

(a) the set of all binary strings with unequal number of 0's and 1's

(b) the set of all binary strings including the null string

(c) the set of all binary strings with exactly one more 0's than the number of 1's or one more 1 than the number of 0's.

(d) None of the above

2.10. The grammar whose productions are

→ if id then <stmt>

→ if id then <stmt> else <stmt>

→ id:=id

is ambiguous because

(a) the sentence

if a then if b then c:=d

(b) the left most and right most derivations of the sentence

if a then if b then c:=d

give rise top different parse trees

(c) the sentence

if a then if b then c:=d else c:=f

has more than two parse trees

(d) the sentence

if a then if then c:=d else c:=f

has two parse trees

2.11. The minimum number of interchanges needed to convert the array

89, 19, 40, 17, 12, 10, 2, 5, 7, 11, 6, 9, 70

(a) 0 (b) 1 (c) 2 (d) 3

2.12. The recurrence relation

T(1) = 2

$$T(n) = 3T\left(\frac{n}{4}\right) + n$$

Has the solution T(n) equal to

(a) O(n) (b) O (log n)

(c) $O\left(n^{\frac{3}{4}}\right)$ (d) None of the above

ZOLLEGE.in

2.13. The average number of key comparisons done on a successful sequential search in list of length n is

(a) log n (b) $\frac{n-1}{2}$ (c) $\frac{n}{2}$ (d) $\frac{n+1}{2}$

2.14. A binary search tree is generated by inserting in order the following integers:

50, 15, 62, 5, 20, 58, 91, 3, 8, 37, 60, 24

The number of nodes in the left subtree and right subtree of the root respectively is

(a) (4, 7) (b) (7, 4) (c) (8, 3) (d) (3, 8)

2.15. Quick-sort is run on two inputs shown below to sort in ascending order

(i) 1,2,3 ....n

(ii) n, n – 1, n – 2, ... 2, 1

Let C_1 and C_2 be the number of comparisons made for the inputs (i) and (ii) respectively. Then,

(a) $C_1 < C_2$ (b) $C_1 > C_2$ (c) $C_1 = C_2$

(d) we cannot say anything for arbitrary n.

2.16. Which of the following macros can put a macro assembler into an infinite loop?

(i)
```
MACRO        M1, X
IF EQ, X:    if X=0 then ....
M1 X + 1
ENDC
IF NE, X:    if X ≠ O then .....
WORD X:      address (X) is stored here
ENDC
ENDM
```

(ii)
```
MACRO M2,X
IF EQ, X
M2 X
ENDC
IF NE, X
WORD X + 1
ENDC
ENDM
```

(a) (ii) only (b) (i) only

(c) both (i) and (ii) (d) None of the above

ZOLLEGE.in

2.17. The correct matching for the following pairs is

(A) Activation record	(1) Linking loader
(B) Location counter	(2) Garbage collection
(C) Reference counts	(3) Subroutine call
(D) Address relocation	(4) Assembler

(a) A – 3 B – 4 C – 1 D - 2
(b) A – 4 B – 3 C – 1 D - 2
(c) A – 4 B – 3 C – 2 D - 1
(d) A – 3 B – 4 C – 2 D - 1

2.18. A 1000 Kbyte memory is managed using variable partitions but to compaction. It currently has two partitions of sizes 200 Kbytes and 260 Kbytes respectively. The smallest allocation request in Kbytes that could be denied is for

(a) 151 (b) 181 (c) 231 (d) 541

2.19. A solution to the Dining Philosophers Problem which avoids deadlock is

(a) ensure that all philosophers pick up the left fork before the right fork
(b) ensure that all philosophers pick up the right fork before the left fork
(c) ensure that one particular philosopher picks up the left fork before the right fork, and that all other philosophers pick up the right fork before the left fork
(d) None of the above

2.20. Four jobs to be executed on a single processor system arrive at time 0^+ in the order A, B, C, D. their burst CPU time requirements are 4, 1, 8, 1 time units respectively. The completion time of A under round robin scheduling with time slice of one time unit is

(a) 10 (b) 4 (c) 8 (d) 9

2.21. Consider the circuit in Fig.2.21 which has a four fit binary number $b_3b_2b_1b_0$ as input and a five bit binary number, $d_4d_3d_2d_1d_0$ as output.

(a) Binary of Hex conversion
(b) Binary to BCD conversion
(c) Binary to grey code conversion
(d) Binary to radix-12 conversion.

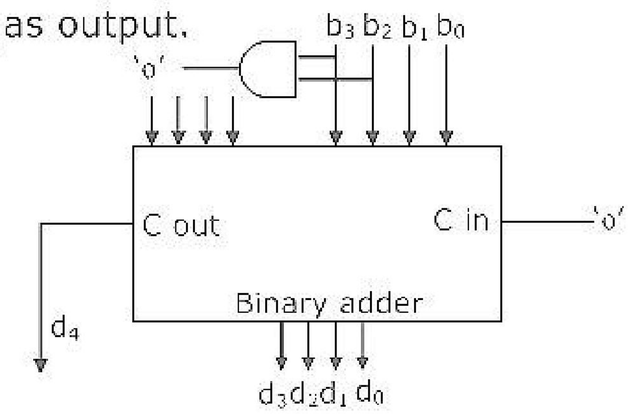

ZOLLEGE.in

2.22. Consider the circuit in Fig.2.22 f implements

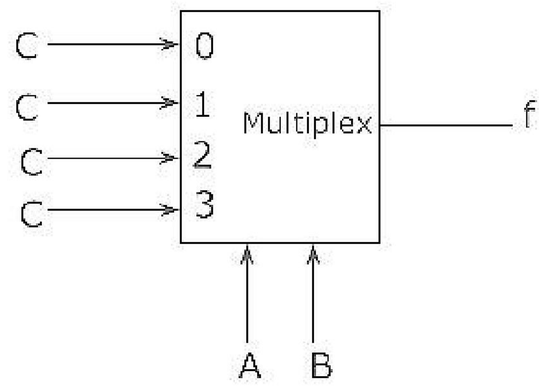

(a) $\overline{A}\,\overline{B}C + \overline{A}B\overline{C} + ABC$

(b) A + B + C

(c) $A \oplus B \oplus C$

(d) AB+BC+CA

2.23. Consider the following state table in Fig.2.23 for a sequential machine. The number of states in the minimized machine will be

Present state \ input x	0	1
A	D0	B1
B	A0	C1
C	A0	B1
D	A1	C1

(a) 4 (b) 3 (c) 2 (d) 1

2.24. What is the equivalent Boolean expression in product-of-sums form for the Karnaugh map given in Fig.2.24.

(a) $B\overline{D} + \overline{B}D$

(b) $\left(B + \overline{C} + D\right)\left(\overline{B} + C + \overline{D}\right)$

(c) $\left(B + \overline{D}\right)\left(\overline{B} + D\right)$

(d) $\left(B + \overline{D}\right)\left(B + \overline{D}\right)$

CD \ AB	00	01	11	20
00		1	1	
01	1			1
11	1			1
10		1	1	

2.25. A micro program control unit is required to generate a total of 25 control signals. Assume that during any microinstruction, at most two control signals are active. Minimum number of bits required in the control word to generate the required control signals will be

(a) 2 (b) 2.5 (c) 10 (d) 12

ZOLLEGE.in

3. Let f be a function defined by

$$f(x) = \begin{cases} x^2 & \text{for } x \le 1 \\ ax^2 + bx + c & \text{for } 1\ x \le 2 \\ x + d & \text{for } x > 2 \end{cases}$$

Find the values for the constants a; b; c and d so that f is continuous and differentiable everywhere on the real line.

4. A binary search tree is used to locate the number 43. Which of the following probe sequences are possible and which are not? Explain.

(a)	61	52	14	17	40	43
(b)	2	3	50	40	60	43
(c)	10	65	31	48	37	43
(d)	81	61	52	14	41	43
(e)	17	77	27	66	18	43

5. A logic network has two data inputs A and B, and two control inputs C_0 and C_1. It implements the function F according to the following table.

C_1	C_2	F
0	0	$\overline{A+B}$
0	1	A + B
1	0	$A \oplus B$

Implement the circuit using one 4 to AB Multiplexor, one 2-input Exclusive OR gate, one 2-input AND gate, one 2-input OR gate and one Inverter.

6. An 8085 based system has an output port with address 00H. Consider the following assembly language program.

```
ORG     0100H
MVI     A, 00H
LXI     H, 0105H
PCHL
HLT
```

(a) What does the program do with respect to the output port $\phi\phi$ H?

(b) Show the waveforms at the three least significant bits of the port $\phi\phi$ H.

ZOLLEGE.in

7. A demand paged virtual memory system uses 16 bit virtual address, page size of 256 bytes, and has 1 Kbyte of main memory. LRU page replacement is implemented using list, whose current status (page numbers in decimal) is

17	1	63

↑

LRU page

For each hexadecimal address in the address sequence given below,

00FF, 010D, 10FF 11B0

indicate,

(i) the new status of the list

(ii) page faults, if any, and

(iii) page replacements, if any.

SECTION – B

Answer any TEN questions from this section. All questions carry equal marks.

8. Let F be the collection of all functions f:{1,2,3} → {1,2,3}. If f and g ∈ F, define an equivalence relation ~ by f ~ g if and only if f(3) = g.

(a) Find the number of equivalence classes defined by ~

(b) Find the number of elements in each equivalence class.

9. The Fibonacci sequence $\{f_1, f_2, f_3 \ldots f_n\}$ is defined by the following recurrence:

$$f_{n+2} = f_{n-1} + f_n, n \geq 1; f_2 = 1 : f_1 = 1 :$$

Prove by induction that every third element of the sequence is even.

10. Let $A = \begin{bmatrix} a_{11} & a_{12} \\ a_{21} & a_{22} \end{bmatrix}$ and $B = \begin{bmatrix} b_{11} & b_{12} \\ b_{21} & b_{22} \end{bmatrix}$ be two matrices such that

AB = I. Let $C = A\begin{bmatrix} 1 & 0 \\ 1 & 1 \end{bmatrix}$ and CD = 1. Express the elements of D in terms of the elements of B.

11. Let G be a context-free grammar where G = ({S, A, B, C}, {a, b, d}, P,S) with the productions in P given below.

S → ABAC

A → aA|ε

B → bB → ε

C → d

ZOLLEGE.in

(ε denoted the null string). Transform the grammar G to an equivalent context-free grammar G that has no ε productions and no unit productions. (A unit production is of the form x → y, and y are non terminals).

12. Given below are the transition diagrams (Fig.12) for two finite state machines M_1 and M_2 recognizing languages L_1 and L_2 respectively.

(a) Display the transition diagram for a machine that recognizes $L_1 L_2$, obtained from transition diagrams for M_1 and M_2 by adding only and transitions and no new states.

(b) Modify the transition diagram obtained in part (a) obtain a transition diagram for a machine that recognizes ($L_1 L_2$) by adding only ε transitions and no new states.

(Final states are enclosed in double circles).

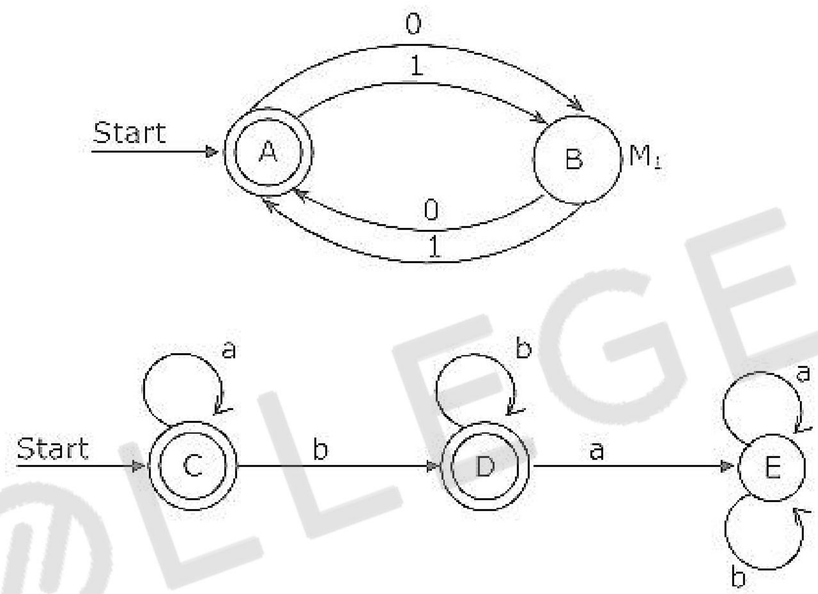

13. Let Q = (q_1, q_2) (a,b), (a, b, Z) δ, qi, Z, ϕ) be a pushdown automaton accepting by empty stack for the language which is the set of all nonempty even palindromes over the set {a,b}. Below is an incomplete specification of the transition d. complete the specification. The top of stack is assumed to be at the right end of the string representing stack contents.

(1) $\delta(q_1, a, Z) = \{(q_1, Za)\}$

(2) $\delta(q_1, b, Z) = \{(q_1, Zb)\}$

(3) $\delta(q_1, a, a) = \{\ldots\ldots, \ldots\ldots\}$

(4) $\delta(q_1, b, b) = \{\ldots\ldots, \ldots\ldots\}$

(5) $\delta(q_2, a, a) = \{(q_2, \varepsilon)\}$

(6) $\delta(q_2, b, b) = \{(q_2, \varepsilon)\}$

(7) $\delta(q_2, \varepsilon, Z) = \{(q_2, \varepsilon)\}$

ZOLLEGE.in

14. A two dimensional array A[1- n] [1 – n] of integers is partially sorted if

$\forall i, j \varepsilon [1 - n - 1]$ $A[i][j] < A[i][j+1]$ and

$A[i][j] <$ $[A[i+1][j]]$

Fill in the blanks:

(a) The smallest item in the array is at A[i] [j] where i =

and j = ...

(b) The smallest item is deleted. Complete the following O(n) procedure to insert item x (which is guaranteed to be smaller than any item in the last row or column) still keeping A partially sorted.

```
procedure        insert (x integer)
var              j´j:integer;
begin
(1) i: =1; j:=A[i] [j]:=x;
(2) while (x > or x >) do
(3) if A[ i + 1] [j] ∩ [i] ]j] then begin
(4) A [i] [j]:= A[i +1] [j]; i: =i + 1
(5) end
(6) else begin
(7)
(8) end
(9) A [i] [j]:=
    end
```

15. Insert the characters of the string K R P C S N Y T J M into a hash table of size 10.

Use the hash funtion

H(x) = (ord (x) – ord ('a') + 1) mod 10

And linear probing to resolve collisions.

(a) Which insertions cause collisions?

(b) Display the final hash table?

16. A complete, undirected, weighted graph G is given on the vertex {0, 1 ...., n – 1} for any fixed 'n'. Draw the minimum spanning tree of G if

(a) the weight of the edge (u, v) is |u – v|

(b) the weight of the edge (u, v) is u + v

ZOLLEGE.in

17. Let G be the directed, weighted graph shown below in Fig.4

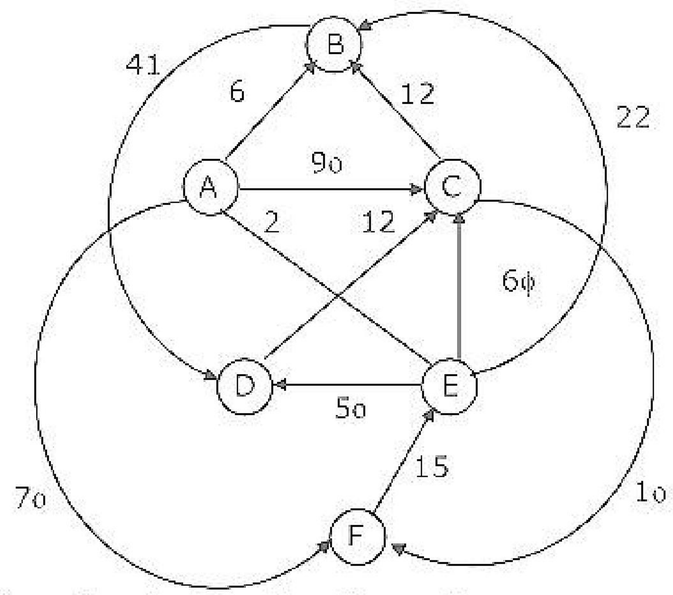

We are interested in the shortest paths from A.

(a) Output the sequence of vertices identified by the Dijkstra's algorithm for single source shortest path when the algorithm is started at node A.

(b) Write down sequence of vertices in the shortest path from A to E.

(c) What is the cost of the shortest path from A to E?

18. Consider the following program that attempts to locate an element x in an array a [ ] using binary search. Assume N > 1. The program is erroneous. Under what conditions does the program fail?

```
var        i.j.k:integer; x:integer.
           a:=array; [1 ... N] of integer.
begin      i:1;=n;
repeat     k:(i+j) div 2;
           if a [k] < x then i:=k
           else j:=k
until (a⌋ =x) or (i∩=j);
if (a [k] = x) then
writeln ('x is not in the array')
else
writeln ('x' is not in the array')
end;
```

19. Consider the following program in pseudo-Pascal syntax. What is printed by the program if parameter a is procedure test 1 is passed as

(i) call-by-reference parameter?

(ii) call-by-value-result parameter?

```
program   Example (input, output)
```

ZOLLEGE.in

```
begin b: = 10 end
procedure test 1 (a:integer);
begin            a:5;
                 writeln (`point 1: `a,b);
                 test 2;
                 wrote;m(`point: `a,b);
end;
begin (*Example*)
b:=3; test ] (b);
writeln (`point 3: `b)
end
```

20. Consider the syntax-directed translation schema (SETS) shown below:

    E → E + E {print "+"}

    E → E * E {print "."}

    E → id {print id.name}

    E → (E)

    An LR – parser executes the actions associated with the productions immediately after a reduction by the corresponding production. Draw the parse tree and write the translation for the sentence.

    (a + b)* (c + d), using SDTS given above.

21. The concurrent programming constructs fork and join are as below:

    fork <label> which creates a new process executing from the specified label

    join <variable> which decrements the specified synchronization variable (by 1) and terminates the process if the new value is not 0.

    Show the precedence graph for S1, S2, S3, S4 and S5 of the concurrent program below.

```
N = 2
M = 2
fork L3
fork L4
S1
L1 : join N
S3
L2: join M
S5
L3:S2
```

ZOLLEGE.in

goto L2

next:

22. A computer system uses the Banker's Algorithm to deal with deadlocks. Its current state is shown in the tables below, where P0, P1, P2 are processes, and R0, R1, R2 are resoures types.

	Maximum Need				Current Allocation			Available		
	R0	R1	R2		R0	R1	R2	R0	R1	R2
P0	4	1	2	P0	1	0	2	2	2	0
P1	1	5	1	P1	0	3	1			
P2	1	2	3	P2	1	0	2			

(a) Show that the system can be in this state.

(b) What will system do on a request by process P0 for one unit of resource type R1?

23. A file system with a one-level directory structure is implemented on a disk with disk block size of 4 K bytes. The disk is used as follows:

Disk-block 0: File Allocation Table, consisting of one 8-bit entry per date block, representing the data block address of the next date block in the file

Disk block 1: Directory, with one 32 bit entry per file:

Disk block 2: Data block 1;

Disk block 3: Data block 2; etc.

(a) What is the maximum possible number of files?

(b) What is the maximum possible file size in blocks?

24. Consider the synchronous sequential circuit in Fig.5.

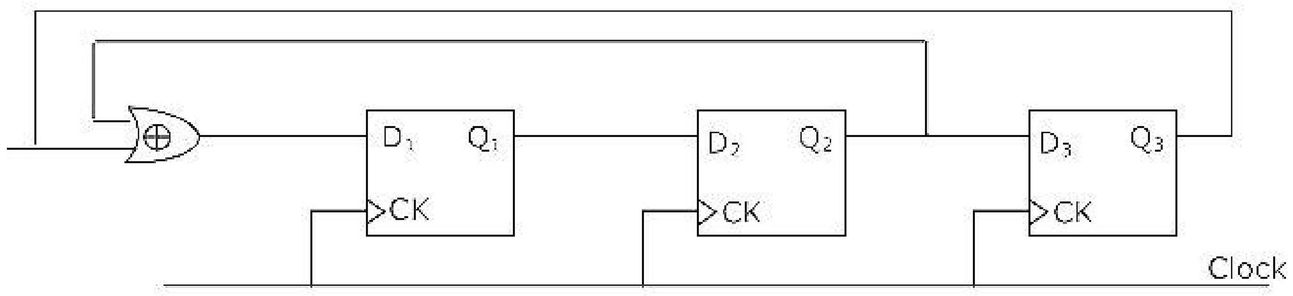

Fig.5

(a) Draw a state diagram, which is implemented by the circuit. Use the following names for the states corresponding to the values of flip-flops as given below.

ZOLLEGE.in

Q1	Q2	Q3	State
0	0	0	S_0
0	0	1	S_1
-	-	-	-
-	-	-	-
-	-	-	-
1	1	1	S_7

(b) Given that the initial of the circuit is S_4, identify the set of states, which are not reachable.

25. A hard disk is connected to a 50 MHz processor through a DMA controller. Assume that the initial set-up of a DMA transfer takes 1000 lock cycles for the processor, and assume that the handling of the interrupt at DMA completion requires 500 clock cycles for the processor. The hard disk has a transfer rate of 2000 Kbytes/sec and average block size transferred is 4 K bytes. What fraction of the processor time is consumed by the disk, if the disk is actively transferring 100% of the time?

Level 1 (Cache memory) Access time = 50 nsec/byte

Size	Hit ratio
8 Kbytes	0.80
16 Kbytes	0.90
64 Kbytes	0.95

Level 1 (Cache memory) Access time = 200 nsec/byte

Size	Hit ratio
4 Kbytes	0.98
16 Kbytes	0.99
64 Kbytes	0.995

Size	Hit ratio
250 M bytes	1.0

26. A computer system has a three level memory hierarchy, with access time and hit ratios as shown below:

Level 1 (Cache memory) Access time = 50 nsec/byte

Size	Hit ratio
8 M byte	0.80
16 M byte	0.90

Level 2 (main memory) Access time = 200 nsec/byte

Size	Hit ratio
4M byte	0.98
16 M byte	0.99

Level 3 Access time = 5 μsec/byte

Size	Hit ratio
260 Mbyte	1.0

ZOLLEGE.in

64 M byte	0.95	64 M byte	0.995		

(a) What should be the minimum sizes of level 1 and 2 memories to achieve an average access time of less than 100 nsec?

(b) What is the average access time achieved using the chosen sizes of level 1 and level 2 memories?

27. A library relational database system uses the following schema

USERS (User #, User Name, Home Town)

BOOKS (Books # Book Title, Author Name)

ISSUED (Book #, User #, Date)

Explain in one English sentence, what each of the following relational algebra queries is designed to determine

(a) σ User #=6 (11 User #, Book Title ((USERS ISSUED) BOOKS))

(b) σ Author Name (BOOKS (σ Home Town) = Delhi (USERS ISSUED)))

ZOLLEGE.in

ZOLLEGE.in