Q.1 – Q.20 Carry One Mark Each.

1. The rank of the matrix

$$\begin{bmatrix} 1 & 1 & 1 \\ 1 & -1 & 0 \\ 1 & 1 & 1 \end{bmatrix} \text{ is:}$$

(A) 0
(B) 1
(C) 2
(D) 3

2. $\nabla \times \nabla \times P$, where P is a vector, is equal to

(A) $P \times \nabla \times P - \nabla^2 P$
(B) $\nabla^2 P + \nabla(\nabla \bullet P)$
(C) $\nabla^2 P + \nabla \times P$
(D) $\nabla(\nabla \bullet P) - \nabla^2 P$

3. $\iint (\nabla \times P) \bullet ds$, where P is a vector, is equal to

(A) $\oint P \bullet dl$
(B) $\int \nabla \times \nabla \times P \bullet dl$
(C) $\int \nabla \times P \bullet dl$
(D) $\iiint \nabla \bullet P dv$

4. A probability density function is of the form

$$p(x) = Ke^{-\alpha|x|}, x \in (-\infty, \infty).$$

The value of K is

(A) 0.5
(B) 1
(C) 0.5α
(D) α

5. A solution for the differential equation

$$\dot{x}(t) + 2x(t) = \delta(t)$$

with initial condition $x(0-) = 0$ is:

ZOLLEGE.in

(A) $e^{-2t}u(t)$

(B) $e^{2t}u(t)$

(C) $e^{-t}u(t)$

(D) $e^{t}u(t)$

6. A low-pass filter having a frequency response $H(j\omega) = A(\omega)e^{j\phi(\omega)}$ does not produce any phase distortion if

(A) $A(\omega) = C\omega^2, \phi(\omega) = k\omega^3$

(B) $A(\omega) = C\omega^2, \phi(\omega) = k\omega$

(C) $A(\omega) = C\omega, \phi(\omega) = k\omega^2$

(D) $A(\omega) = C,\ \phi(\omega) = k\omega^{-1}$

7. The values of voltage (V_D) across a tunnel-diode corresponding to peak and valley currents are V_p and V_v respectively. The range of tunnel-diode voltage V_D for which the slope of its $I - V_D$ characteristics is negative would be

(A) $V_D < 0$

(B) $0 \le V_D < V_p$

(C) $V_p \le V_D < V_v$

(D) $V_D \ge V_v$

8. The concentration of minority carriers in an extrinsic semiconductor under equilibrium is:

(A) directly proportional to the doping concentration

(B) inversely proportional to the doping concentration

(C) directly proportional to the intrinsic concentration

(D) inversely proportional to the intrinsic concentration

9. Under low level injection assumption, the injected minority carrier current for an extrinsic semiconductor is essentially the

(A) diffusion current

(B) drift current

(C) recombination current

(D) induced current

ZOLLEGE.in

10. The phenomenon known as "Early Effect" in a bipolar transistor refers to a reduction of the effective base-width caused by

(A) electron-hole recombination at the base

(B) the reverse biasing of the base-collector junction

(C) the forward biasing of emitter-base junction

(D) the early removal of stored base charge during saturation-to-cutoff switching.

11. The input impedance (Z_i) and the output impedance (Z_0) of an ideal trans-conductance (voltage controlled current source) amplifier are

(A) $Z_i = 0, Z_0 = 0$

(B) $Z_i = 0, Z_0 = \infty$

(C) $Z_i = \infty, Z_0 = 0$

(D) $Z_i = \infty, Z_0 = \infty$

12. An n-channel depletion MOSFET has following two points on its $I_D - V_{GS}$ curve:

(i) $V_{GS} = 0$ at $I_D = 12mA$ and

(ii) $V_{GS} = -6$ Volts at $I_D = 0$

Which of the following Q-points will give the highest trans-conductance gain for small signals?

(A) $V_{GS} = -6$ Volts

(B) $V_{GS} = -3$ Volts

(C) $V_{GS} = 0$ Volts

(D) $V_{GS} = 3$ Volts

13. The number of product terms in the minimized sum-of-product expression obtained through the following K-map is (where "d" denotes don't care states)

1	0	0	1
0	d	0	0
0	0	d	1
1	0	0	1

(A) 2

(B) 3

(C) 4

(D) 5

ZOLLEGE.in

14. Let $x(t) \leftrightarrow X(j\omega)$ be Fourier Transform pair. The Fourier Transform of the signal $x(5t-3)$ in terms of $X(j\omega)$ is given as

(A) $\frac{1}{5}e^{\frac{j3\omega}{5}}X\left(\frac{j\omega}{5}\right)$

(B) $\frac{1}{5}e^{\frac{j3\omega}{5}}X\left(\frac{j\omega}{5}\right)$

(C) $\frac{1}{5}e^{j3\omega}X\left(\frac{j\omega}{5}\right)$

(D) $\frac{1}{5}e^{j3\omega}X\left(\frac{j\omega}{5}\right)$

15. The Dirac delta function $\delta(t)$ is defined as

(A) $\delta(t) = \begin{cases} 1 & t = 0 \\ 0 & \text{otherwise} \end{cases}$

(B) $\delta(t) = \begin{cases} \infty & t = 0 \\ 0 & \text{otherwise} \end{cases}$

(C) $\delta(t) = \begin{cases} 1 & t = 0 \\ 0 & \text{otherwise} \end{cases}$ and $\int_{-\infty}^{\infty} \delta(t)\,dt = 1$

(D) $\delta(t) = \begin{cases} \infty & t = 0 \\ 0 & \text{otherwise} \end{cases}$ and $\int_{-\infty}^{\infty} \delta(t)\,dt = 1$

16. If the region of convergence of $x_1[n] + x_2[n]$ is $\frac{1}{3} < |z| < \frac{2}{3}$, then the region of convergence of $x_n[n] - x_2[n]$ includes

(A) $\frac{1}{3} < |z| < 3$

(B) $\frac{2}{3} < |z| < 3$

(C) $\frac{3}{2} < |z| < 3$

(D) $\frac{1}{3} < |z| < \frac{2}{3}$

17. The open-loop transfer function of a unity-gain feedback control system is given by

ZOLLEGE.in

$$G(s) = \frac{K}{(s+1)(s+2)}.$$

The gain margin of the system in dB is given by

(A) 0

(B) 1

(C) 20

(D) ∞

18. In the system shown below, $x(t) = (\sin t)u(t)$. In steady-sate, the response $y(t)$ will be:

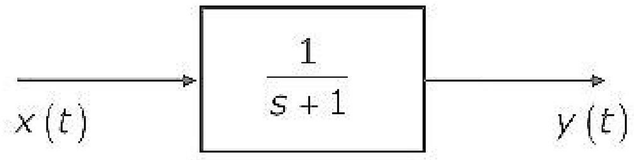

(A) $\frac{1}{\sqrt{2}}\sin\left(t - \frac{\pi}{4}\right)$

(B) $\frac{1}{\sqrt{2}}\sin\left(t + \frac{\pi}{4}\right)$

(C) $\frac{1}{\sqrt{2}}e^{-t}\sin t$

(D) $\sin t - \cos t$

19. The electric field of an electromagnetic wave propagating in the positive z-direction is given by

$$E = \hat{a}_x \sin(\omega t - \beta z) + \hat{a}_y \sin\left(\omega t - \beta z + \frac{\pi}{2}\right).$$

The wave is

(A) linearly polarized in the z-direction

(B) elliptically polarized

(C) left-hand circularly polarized

(D) right-hand circularly polarized

20. A transmission line is feeding 1 Watt of power to a horn antenna having a gain of 10 dB. The antenna is matched to the transmission line. The total power radiated by the horn antenna into the free-space is:

(A) 10 Watts

ZOLLEGE.in

(B) 1 Watt

(C) 0.1 Watt

(D) 0.01 Watt

21. The eigenvalues and the corresponding eigenvectors of a 2×2 matrix are given by

Eigenvalue	Eigenvector
$\lambda_1 = 8$	$v_1 = \begin{bmatrix} 1 \\ 1 \end{bmatrix}$
$\lambda_2 = 4$	$v_2 = \begin{bmatrix} 1 \\ -1 \end{bmatrix}$

The matrix is:

(A) $\begin{bmatrix} 6 & 2 \\ 2 & 6 \end{bmatrix}$

(B) $\begin{bmatrix} 4 & 6 \\ 6 & 4 \end{bmatrix}$

(C) $\begin{bmatrix} 2 & 4 \\ 4 & 2 \end{bmatrix}$

(D) $\begin{bmatrix} 4 & 8 \\ 8 & 4 \end{bmatrix}$

22. For the function of a complex variable $W = \ln Z$ (where, $W = u + jv$ and $Z = x + jy$), the $u =$ constant lines get mapped in Z-plane as

(A) set of radial straight lines

(B) set of concentric circles

(C) set of confocal hyperbolas

(D) set of confocal ellipses

23. The value of the contour integral $\oint_{|z-j|=2} \frac{1}{z^2+4} dz$ in posiive sense is

(A) $\frac{j\pi}{2}$

(B) $\frac{-\pi}{2}$

(C) $\frac{-j\pi}{2}$

ZOLLEGE.in

(D) $\frac{\pi}{2}$

24. The integral $\int_0^{\pi} \sin^3 \theta \, d\theta$ is given by

(A) $\frac{1}{2}$

(B) $\frac{2}{3}$

(C) $\frac{4}{3}$

(D) $\frac{8}{3}$

25. Three companies, X, Y and Z supply computers to a university. The percentage of computers supplied by them and the probability of those being defective are tabulated below.

Company	% of computers supplied	Probability of being defective
X	60%	0.01
Y	30%	0.02
Z	10%	0,03

Given that a computer is defective, the probability that it was supplied by Y is:

(A) 0.1

(B) 0.2

(C) 0.3

(D) 0.4

26. For the matrix $\begin{bmatrix} 4 & 2 \\ 2 & 4 \end{bmatrix}$ the eigenvalue corresponding to the eigenvector $\begin{bmatrix} 101 \\ 101 \end{bmatrix}$ is:

(A) 2

(B) 4

(C) 6

(D) 8

27. For the differential equation $\frac{d^2y}{dx^2} + k^2 y = 0$ the boundary conditions are

ZOLLEGE.in

(i) $y = 0$ for $x = 0$ and

(ii) $y = 0$ for $x = a$

The form of non-zero solutions of y (where m varies over all integers) are

(A) $y = \sum_m A_m \sin \frac{m\pi x}{a}$

(B) $y = \sum_m A_m \cos \frac{m\pi x}{a}$

(C) $y = \sum_m A_m x^{\frac{m\pi}{a}}$

(D) $y = \sum_m A_m e^{-\frac{m\pi x}{a}}$

28. Consider the function $f(t)$ having Laplace transform

$$F(s) = \frac{\omega_0}{s^2 + \omega_0^2} \quad \text{Re}[s] > 0$$

The final value of $f(t)$ would be:

(A) 0

(B) 1

(C) $-1 \le f(\infty) \le 1$

(D) ∞

29. As x is increased from $-\infty$ to ∞, the function

$$f(x) = \frac{e^x}{1 + e^x}$$

(A) monotonically increases

(B) monotonically decreases

(C) increases to a maximum value and then decreases

(D) decreases to a minimum value and then increases

30. A two port network is represented by ABCD parameters given by

$$\begin{bmatrix} V_1 \\ I_1 \end{bmatrix} = \begin{bmatrix} A & B \\ C & D \end{bmatrix} \begin{bmatrix} V_2 \\ -I_2 \end{bmatrix}$$

If port-2 is terminated by R_L, the input impedance seen at port-1 is given by

(A) $\frac{A + BR_L}{C + DR_L}$

ZOLLEGE.in

(B) $\dfrac{AR_L + C}{BR_L + D}$

(C) $\dfrac{DR_L + A}{BR_L + C}$

(D) $\dfrac{B + AR_L}{D + CR_L}$

31. In the two port network shown in the figure below, z_{12} and z_{21} are, respectively

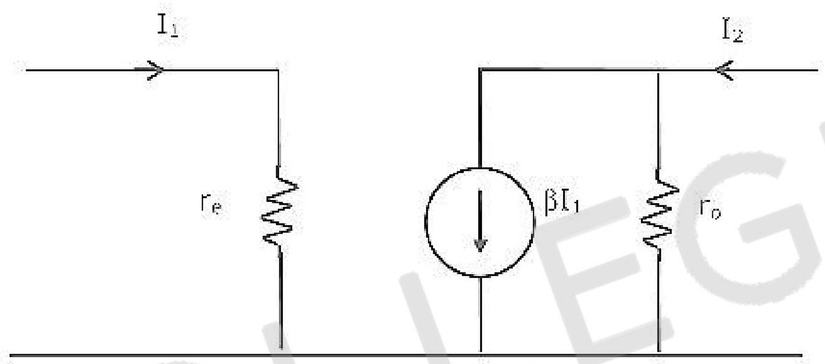

(A) r_e and βr_0

(B) 0 and $-\beta r_0$

(C) 0 and βr_0

(D) r_e and $-\beta r_0$

32. The first and the last critical frequencies (singularities) of a driving point impedance function of a passive network having two kinds of elements, are a pole and a zero respectively. The above property will be satisfied by

(A) RL network only

(B) RC network only

(C) LC network only

(D) RC as well as RL networks

33. A 2mH inductor with some initial current can be represented as shown below, where s is the Laplace Transform variable. The value of initial current is:

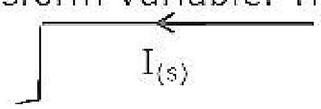

ZOLLEGE.in

(A) 0.5 A
(B) 2.0 A
(C) 1.0 A
(D) 0.0 A

34. In the figure shown below, assume that all the capacitors are initially uncharged. If $v_i(t) = 10u(t)$ Volts, $v_0(t)$ is given by

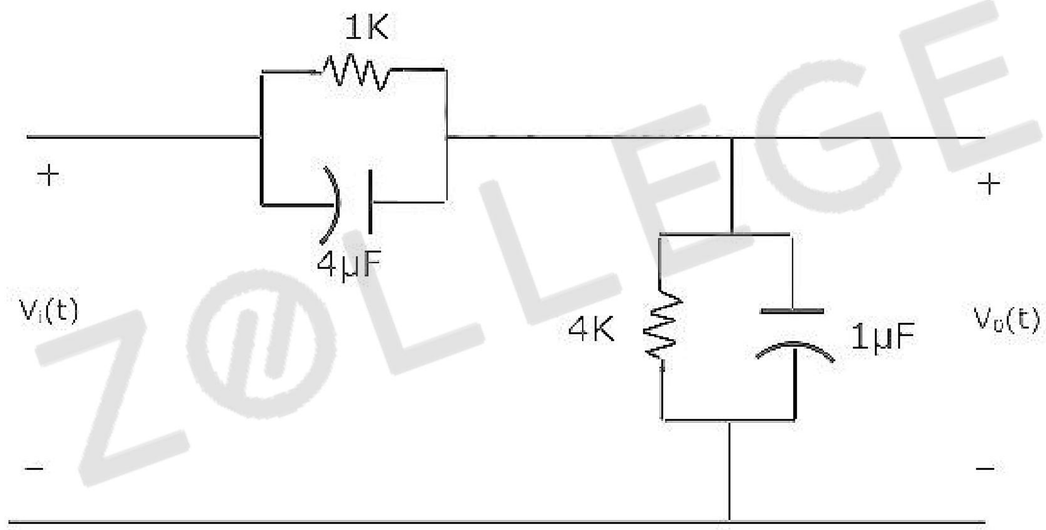

(A) $8e^{-0.004t}$ Volts
(B) $8\left(1-e^{-0.004t}\right)$ Volts
(C) $8u(t)$ Volts
(D) 8 Volts

35. Consider two transfer functions

$$G_1(s) = \frac{1}{s^2 + as + b} \text{ and } G_2(s) = \frac{s}{s^2 + as + b}.$$

The 3-dB bandwidths of their frequency responses are, respectively

(A) $\sqrt{a^2 - 4b}, \sqrt{a^2 + 4b}$
(B) $\sqrt{a^2 + 4b}, \sqrt{a^2 - 4b}$

ZOLLEGE.in

(C) $\sqrt{a^2-4b}, \sqrt{a^2-4b}$

(D) $\sqrt{a^2+4b}, \sqrt{a^2+4b}$

36. A negative resistance R_{neg} is connected to a passive network N having driving point impedance $Z_1(s)$ as shown below. For $Z_2(s)$ to be positive real,

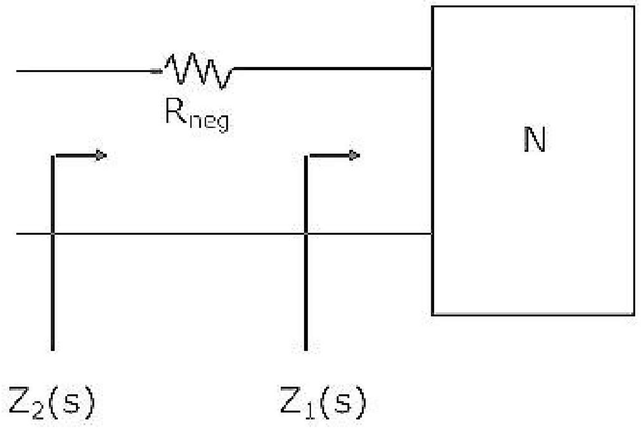

(A) $|R_{neg}| \le \operatorname{Re} Z_1(j\omega), \forall \omega$

(B) $|R_{neg}| \le |Z_1(j\omega)|, \forall \omega$

(C) $|R_{neg}| \le \operatorname{Im} Z_1(j\omega), \forall \omega$

(D) $|R_{neg}| \le \angle Z_1(j\omega), \forall \omega$

37. In the circuit shown below, the switch was connected to position 1 at $t < 0$ and at $t = 0$, it is changed to position 2. Assume that the diode has zero voltage drop and a storage time t_s. For $0 < t \le t_s$, v_R is given by (all in Volts)

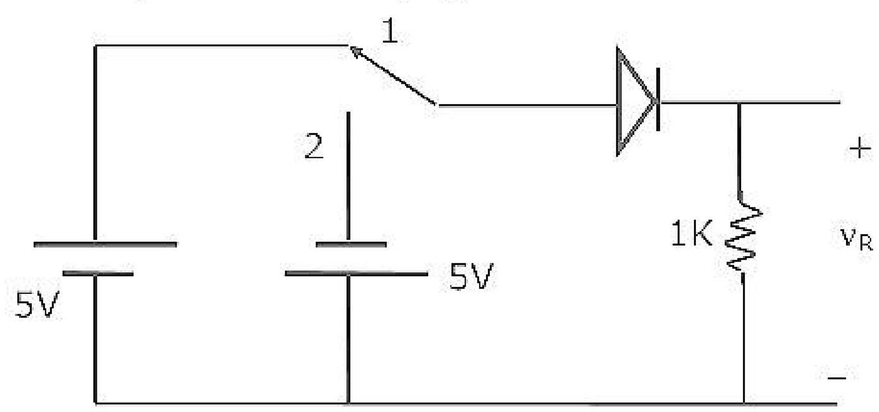

(A) $v_R = -5$

(B) $v_R = +5$

(C) $0 \le v_R < 5$

ZOLLEGE.in

(D) $-5 < \nu_R < 0$

38. The majority carriers in an n-type semiconductor have an average drift velocity **v** in a direction perpendicular to a uniform magnetic field **B**. the electric field **E** induced due to Hall effect acts in the direction

(A) $\mathbf{v} \times \mathbf{B}$

(B) $\mathbf{B} \times \mathbf{v}$

(C) along **v**

(D) opposite to **v**

39. Find the correct match between Group 1 and Group 2:

Group 1	Group 2
(E) Varactor diode	(1) Voltage reference
(F) PIN diode	(2) High frequency switch
(G) Zener diode	(3) Tuned circuits
(H) Schottky diode	(4) Current controlled attenuator

(A) E - 4 F - 2 G - 1 H - 3

(B) E - 2 F - 4 G - 1 H - 3

(C) E - 3 F - 4 G - 1 H - 2

(D) E - 1 F - 3 G - 2 H - 4

40. A heavily doped n – type semiconductor has the following data:

Hole-electron mobility ratio : 0.4

Doping concentration : 4.2×10^8 atoms/m^3

Intrinsic concentration : 1.5×10^4 atoms/m^3

The ratio of conductance of the n – type semiconductor to that of the intrinsic semiconductor of same material and at the same temperature is given by

(A) 0.00005

(B) 2,000

(C) 10,000

(D) 20,000

41. For the circuit shown in the following figure, the capacitor C is initially uncharged. At $t = 0$, the switch S is closed. The voltage V_C across the capacitor at $t = 1$ millisecond is:

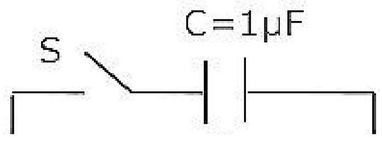

ZOLLEGE.in

In the figure shown above, the OP-AMP is supplied with ±15V and the ground has been shown by the symbol ∇ .

(A) 0 Volt

(B) 6.3 Volts

(C) 9.45 Volts

(D) 10 Volts

42. For the circuit shown below, assume that the zener diode is ideal with a breakdown voltage of 6 Volts. The waveform observed across R is:

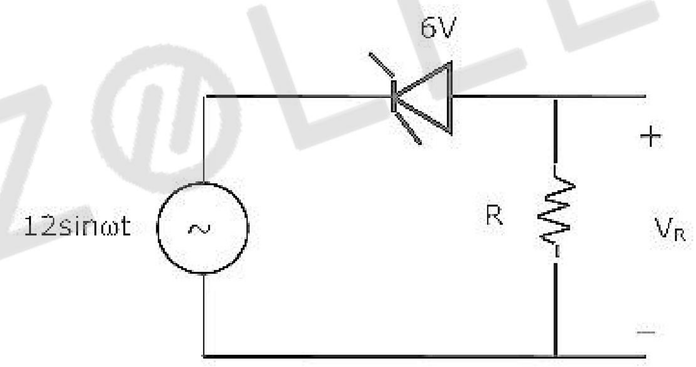

(A)

(B)

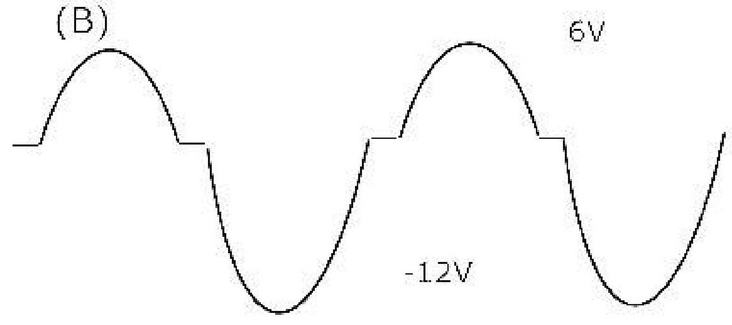

(C)

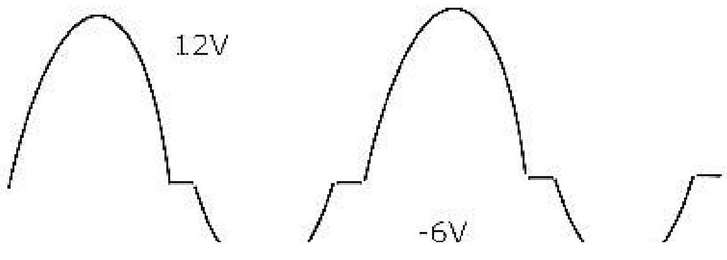

(D)

ZOLLEGE.in

43. A new Binary Coded Pentary (BCP) number system is proposed in which every digit of a base-5 number is represented by its corresponding 3-bit binary code. For example, the base-5 number 24 will be represented by its BCP code 010100. In this numbering system, the BCP code 100010011001 corresponds to the following number in base-5 system

(A) 423

(B) 1324

(C) 2201

(D) 4231

44. An I/O peripheral device shown in figure (b) below is to be interfaced to an 8085 microprocessor. To select the I/O device in the I/O address range D4 H – D7 H, its chip-select $(\overline{CS})$ should be connected to the output of the decoder shown in figure (a) below:

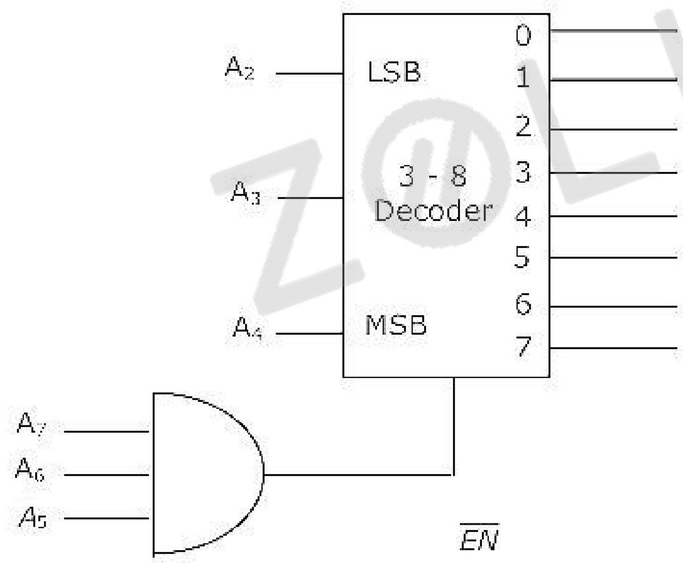

Fig. (a)

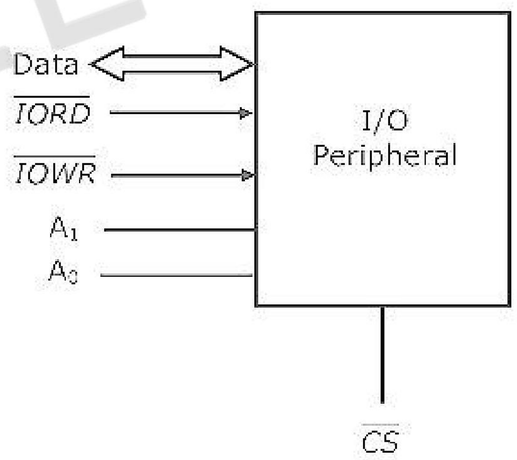

Fig. (b)

(A) output 7

(B) output 5

(C) output 2

(D) output 0

45. For the circuit shown in figure below, two 4-bit parallel-in serial-out shift registers loaded with the data shown are used to feed the data to a full adder. Initially, all

ZOLLEGE.in

the flip-flops are in clear state. After applying two clock pulses, the outputs of the full-adder should be

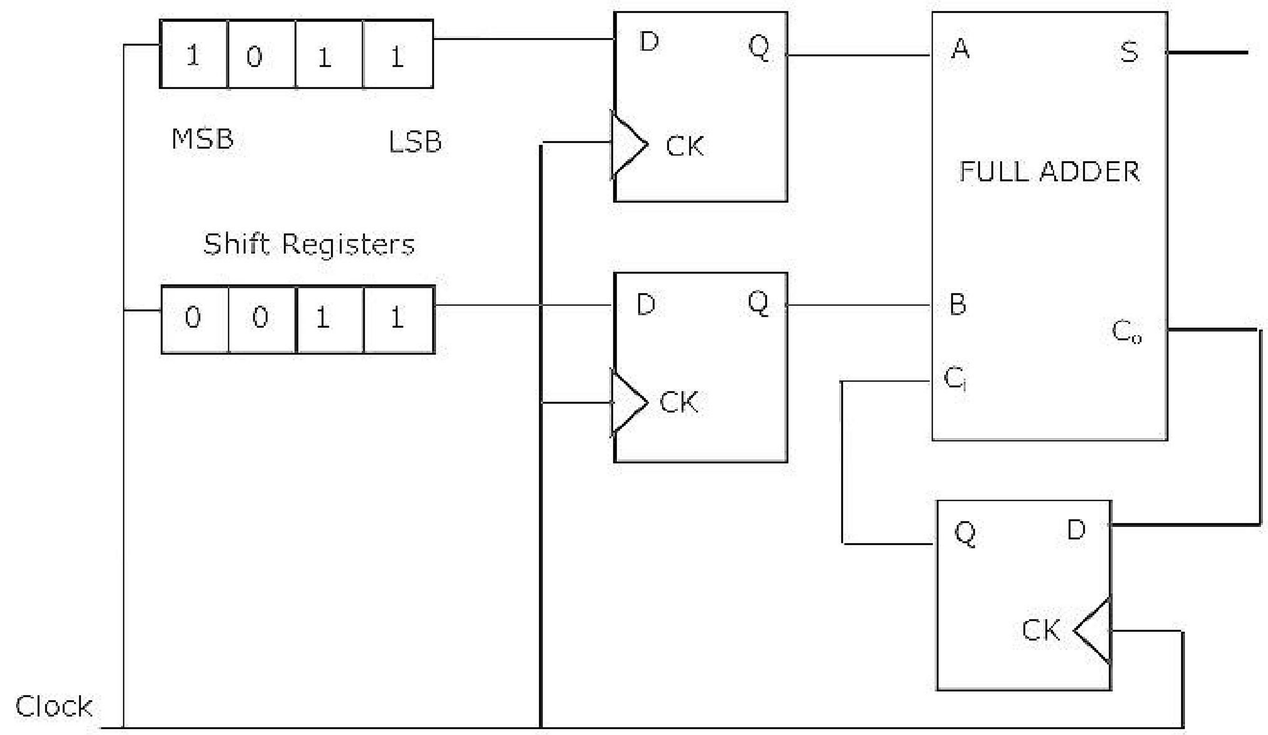

(A) $S = 0 \quad C_0 = 0$

(B) $S = 0 \quad C_0 = 1$

(C) $S = 1 \quad C_0 = 0$

(D) $S = 1 \quad C_0 = 1$

46. A 4-bit D/A converter is connected to a free-running 3-bit UP counter, as shown in the following figure. Which of the following waveforms will be observed at V_o ?

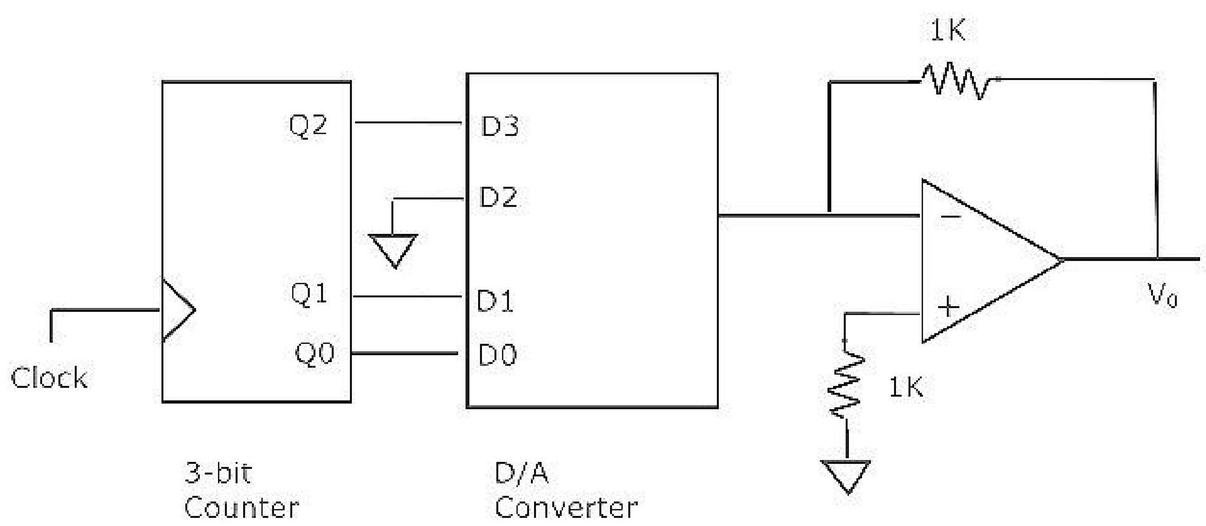

In the figure shown above, the ground has been shown by the symbol ▽

(A)

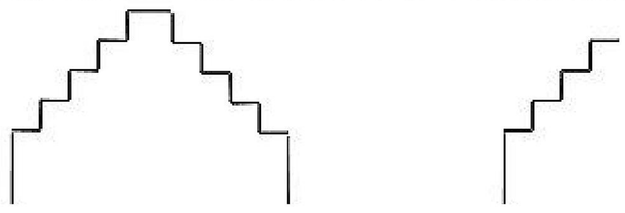

(B)

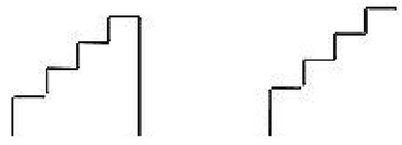

ZOLLEGE.in

(C)

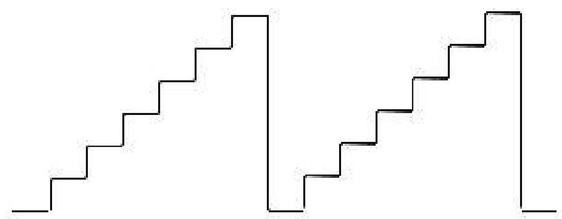

(D)

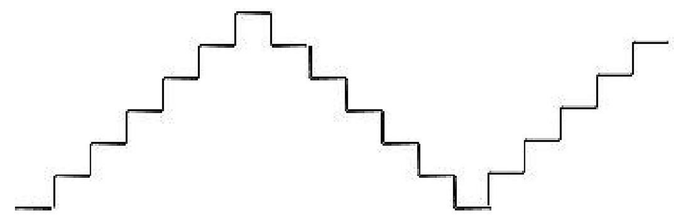

47. Two D-flip-flops, as shown below, are to be connected as a synchronous counter that goes through the following Q_1Q_0 sequence

$00 \rightarrow 01 \rightarrow 11 \rightarrow 10 \rightarrow 00 \rightarrow \cdots\cdots$

The inputs D_0 and D_1 respectively should be connected as

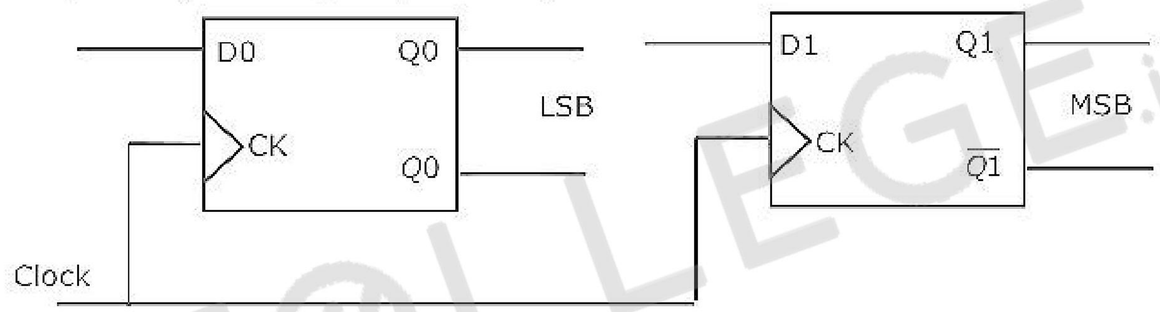

(A) $\overline{Q}_1$ and Q_0

(B) $\overline{Q}_0$ and Q_1

(C) $\overline{Q}_1Q_0$ and $\overline{Q}_1Q_0$

(D) $\overline{Q}_1\overline{Q}_0$ and Q_1Q_0

48. Following is the segment of a 8085 assembly language program:

```
            LXI SP, EFFF H
            CALL 3000 H
                ⋮
                ⋮
3000 H :    LXI H, 3CF4 H
            PUSH PSW
            SPHL
            POP PSW
            RET
```

ZOLLEGE.in

On completion of RET execution, the contents of SP is:

(A) 3CFO H

(B) 3CF8 H

(C) 3FFD H

(D) EFFF H

49. The point P in the following figure is stuck-at-1. The output *f* will be

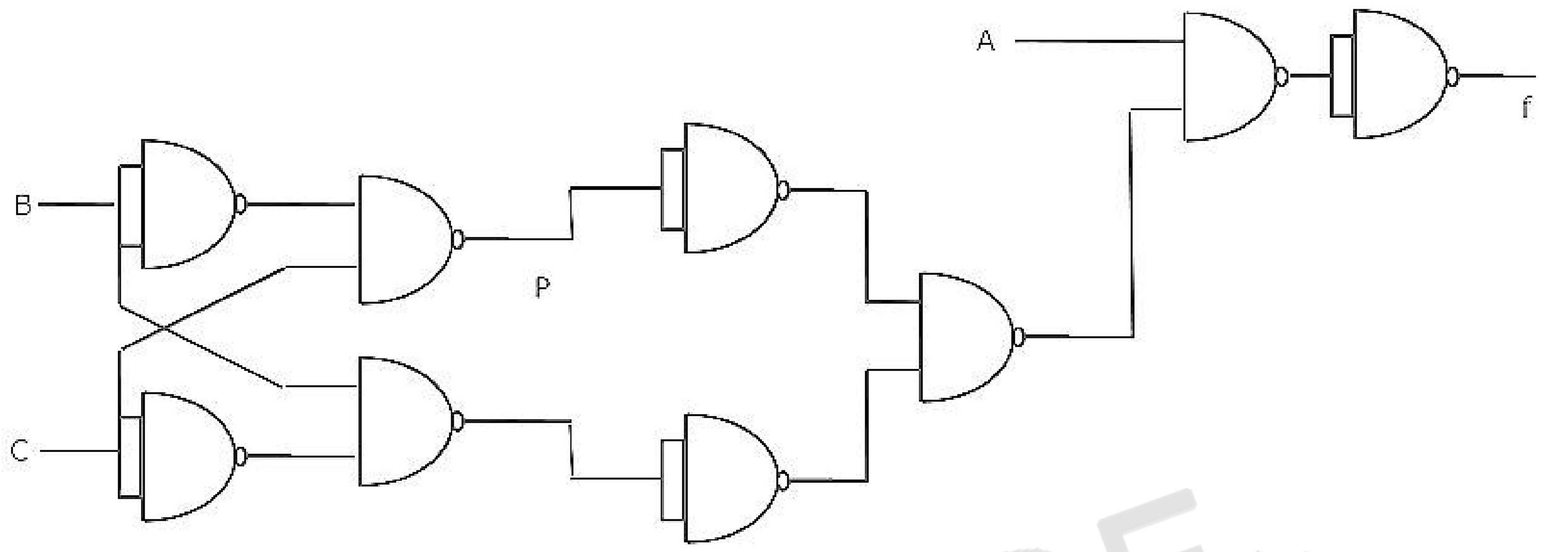

(A) $\overline{AB\overline{C}}$

(B) $\overline{A}$

(C) $AB\overline{C}$

(D) A

50. A signal $m(t)$ with bandwidth 500 Hz is first multiplied by a signal $g(t)$ where

$$g(t) = \sum_{k=-\infty}^{\infty} (-1)^k \, \delta\left(t - 0.5 \times 10^{-4} k\right)$$

The resulting signal is then passed through an ideal lowpass filter with bandwidth 1 kHz. The output of the lowpass filter would be:

(A) $\delta(t)$

(B) $m(t)$

(C) 0

(D) $m(t)\delta(t)$

ZOLLEGE.in

51. The minimum sampling frequency (in samples/sec) required to reconstruct the following signal from its samples without distortion.

$x(t) = 5\left(\frac{\sin 2\pi 1000t}{\pi t}\right)^3 + 7\left(\frac{\sin 2\pi 1000t}{\pi t}\right)^2$ would be:

(A) 2×10^3

(B) 4×10^3

(C) 6×10^3

(D) 8×10^3

52. A uniformly distributed random variable X with probability density function

$$f_x(x) = \frac{1}{10}\left(u(x+5) - u(x-5)\right)$$

Where $u(.)$ is the unit step function is passed through a transformation given in the figure below. The probability density function of the transformed random variable Y would be

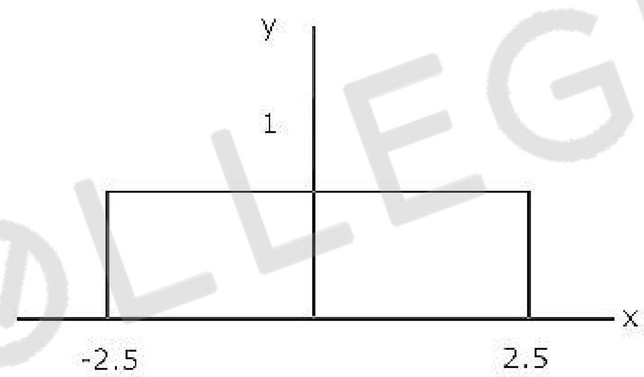

(A) $f_Y(y) = \frac{1}{5}\left(u(y+2.5) - u(y-2.5)\right)$

(B) $f_Y(y) = 0.5\delta(y) + 0.5\delta(y-1)$

(C) $f_Y(y) = 0.25\delta(y+2.5) + 0.25\delta(y-2.5) + 0.5\delta(y)$

(D) $f_Y(y) = 0.25\delta(y+2.5) + 0.25\delta(y-2.5) + \frac{1}{10}\left(u(y+2.5) - u(y-2.5)\right)$

53. A system with input $x[n]$ and output $y[n]$ is given as $y[n] = \left(\sin\frac{5}{6}\pi n\right)x(n)$. The system is:

(A) linear, stable and invertible

(B) non-linear, stable and non-invertible

ZOLLEGE.in

(C) linear, stable and non-invertible
(D) linear, unstable and invertible

54. The unit-step response of a system starting from rest is given by

$$c(t) = 1 - e^{-2t} \text{ for } t \geq 0$$

The transfer function of the system is:

(A) $\frac{1}{1+2s}$

(B) $\frac{2}{2+s}$

(C) $\frac{1}{2+s}$

(D) $\frac{2s}{1+2s}$

55. The Nyquist plot of $G(j\omega)H(j\omega)$ for a closed loop control system, passes through $(-1, j0)$ point in the GH plane. The gain margin of the system in dB is equal to

(A) infinite
(B) greater than zero
(C) less than zero
(D) zero

ZOLLEGE.in

56. The positive values of "K" and "a" so that the system shown in the figure below oscillates at a frequency of 2 rad/sec respectively are

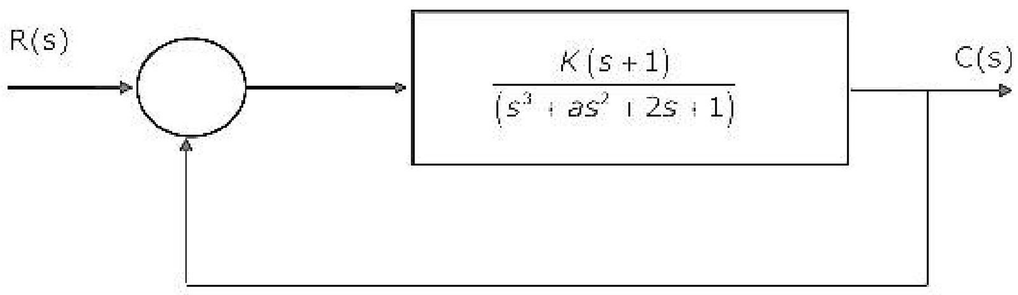

(A) 1, 0.75
(B) 2, 0.75
(C) 1, 1

ZOLLEGE.in

(D) 2, 2

57. The unit impulse response of a system is:

$$h(t) = e^{-t},\ t \geq 0$$

For this system, the steady-state value of the output for unit step input is equal to

(A) -1

(B) 0

(C) 1

(D) ∞

58. The transfer function of a phase-lead compensator is given by

$$G_c(s) = \frac{1+3Ts}{1+Ts} \text{ where } T > 0$$

The maximum phase-shift provided by such a compensator is:

(A) $\frac{\pi}{2}$

(B) $\frac{\pi}{3}$

(C) $\frac{\pi}{4}$

(D) $\frac{\pi}{6}$

59. A linear system is described by the following state equation

$$\dot{X}(t) = AX(t) + BU(t),\ A = \begin{bmatrix} 0 & 1 \\ -1 & 0 \end{bmatrix}$$

The state-transition matrix of the system is:

(A) $\begin{bmatrix} \cos t & \sin t \\ -\sin t & \cos t \end{bmatrix}$

(B) $\begin{bmatrix} -\cos t & \sin t \\ -\sin t & -\cos t \end{bmatrix}$

(C) $\begin{bmatrix} -\cos t & -\sin t \\ -\sin t & \cos t \end{bmatrix}$

(D) $\begin{bmatrix} \cos t & -\sin t \\ \cos t & \sin t \end{bmatrix}$

ZOLLEGE.in

60. The minimum step-size required for a Delta-Modulator operating at 32 K samples/sec to track the signal (here $u(t)$ is the unit-step function)

$$x(t) = 125t\left(u(t) - u(t-1)\right) + (250 - 125t)\left(u(t-1) - u(t-2)\right)$$

So that slope-overload is avoided, would be

(A) 2^{-10}

(B) 2^{-8}

(C) 2^{-6}

(D) 2^{-4}

61. A zero-mean white Gaussian noise is passed through an ideal lowpass filter of bandwidth 10 kHz. The output is then uniformly sampled with sampling period $t_s = 0.03$ msec. The samples so obtained would be

(A) correlated

(B) statistically independent

(C) uncorrelated

(D) orthogonal

62. A source generates three symbols with probabilities 0.25, 0.25, 0.50 at a rate of 3000 symbols per second. Assuming independent generation of symbols, the most efficient source encoder would have average bit rate as

(A) 6000 bits/sec

(B) 4500 bits/sec

(C) 3000 bits/sec

(D) 1500 bits/sec

63. The diagonal clipping in Amplitude Demodulation (using envelope detector) can be avoided if RC time-constant of the envelope detector satisfies the following condition, (here W is message bandwidth and ω_c is carrier frequency both in rad/sec)

(A) $RC < \frac{1}{W}$

(B) $RC > \frac{1}{W}$

(C) $RC < \frac{1}{\omega_c}$

(D) $RC > \frac{1}{\omega_c}$

ZOLLEGE.in

64. In the following figure the minimum value of the constant "C", which is to be added to $y_1(t)$ such that $y_1(t)$ and $y_2(t)$ are different, is

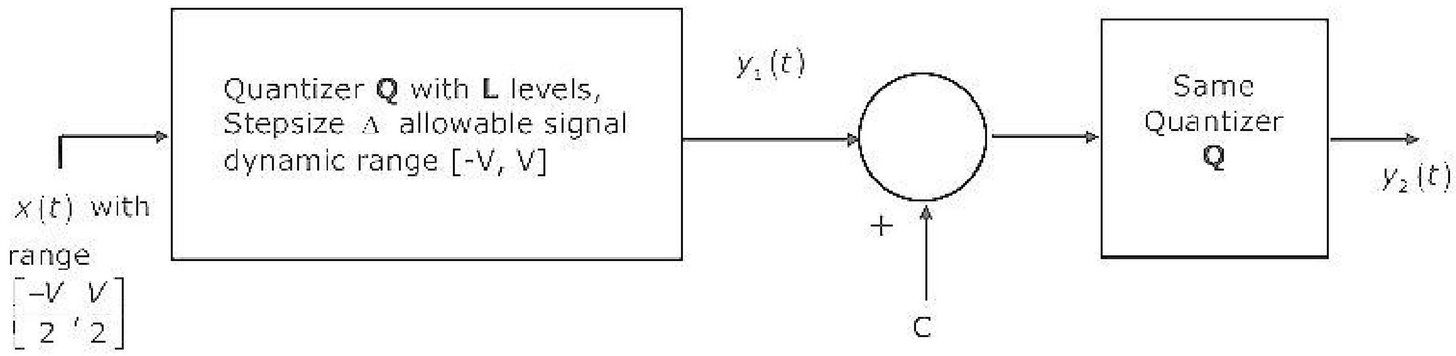

(A) Δ

(B) $\frac{\Delta}{2}$

(C) $\frac{\Delta^2}{12}$

(D) $\frac{\Delta}{L}$

65. A message signal with bandwidth 10 kHz is Lower-Side Band SSB modulated with carrier frequency $f_{c1} = 10^6$ Hz. The resulting signal is then passed through a Narrow-Band Frequency Modulator with carrier frequency $f_{c2} = 10^9$ Hz.

The bandwidth of the output would be:

(A) 4×10^4 Hz

(B) 2×10^6 Hz

(C) 2×10^9 Hz

(D) 2×10^{10} Hz

66. A medium of relative permittivity $\varepsilon_{r2} = 2$ forms an interface with free-space. A point source of electromagnetic energy is located in the medium at a depth of 1 meter from the interface. Due to the total internal reflection, the transmitted beam has a circular cross-section over the interface. The area of the beam cross-section at the interface is given by

(A) $2\pi m^2$

(B) $\pi^2 m^2$

(C) $\frac{\pi}{2} m^2$

(D) πm^2

ZOLLEGE.in

67. A medium is divided into regions I and II about $x = 0$ plane, as shown in the figure below. An electromagnetic wave with electric field $E_1 = 4\hat{a}_x + 3\hat{a}_y + 5\hat{a}_z$ is incident normally on the interface form region-I. The electric field E_2 in region-II at the interface is:

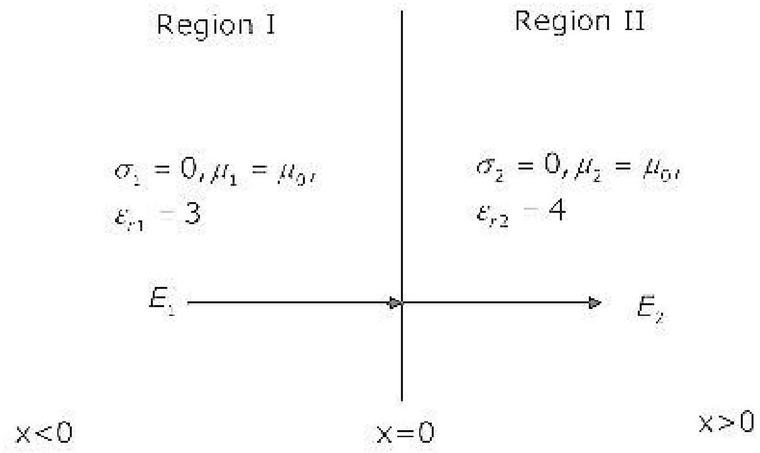

(A) $E_2 = E_1$

(B) $4\hat{a}_x + 0.75\hat{a}_y - 1.25\hat{a}_z$

(C) $3\hat{a}_x + 3\hat{a}_y + 5\hat{a}_z$

(D) $-3\hat{a}_x + 3\hat{a}_y + 5\hat{a}_z$

68. When a plane wave traveling in free-space is incident normally on a medium having $\varepsilon_r = 4.0$, the fraction of power transmitted into the medium is given by

(A) $\frac{8}{9}$

(B) $\frac{1}{2}$

(C) $\frac{1}{3}$

(D) $\frac{5}{6}$

69. A rectangular waveguide having TE_{10} mode as dominant mode is having a cutoff frequency of 18-GHz for the TE_{30} mode. The inner broad-wall dimension of the rectangular waveguide is:

(A) $\frac{5}{3}$ cms

(B) 5 cms

(C) $\frac{5}{2}$ cms

(D) 10 cms

ZOLLEGE.in

70. A mast antenna consisting of a 50 meter long vertical conductor operates over a perfectly conducting ground plane. It is base-fed at a frequency of 600 kHz. The radiation resistance of the antenna in Ohms is:

(A) $\frac{2\pi^2}{5}$

(B) $\frac{\pi^2}{5}$

(C) $\frac{4\pi^2}{5}$

(D) $20\pi^2$

Common Data Questions:

Common Data for Questions 71, 72, 73:

In the transistor amplifier circuit shown in the figure below, the transistor has the following parameters:

$$\beta_{DC} = 60, V_{BE} = 0.7V, h_{ie} \to \infty, h_{re} \to \infty$$

The capacitance C_c can be assumed to be infinite.

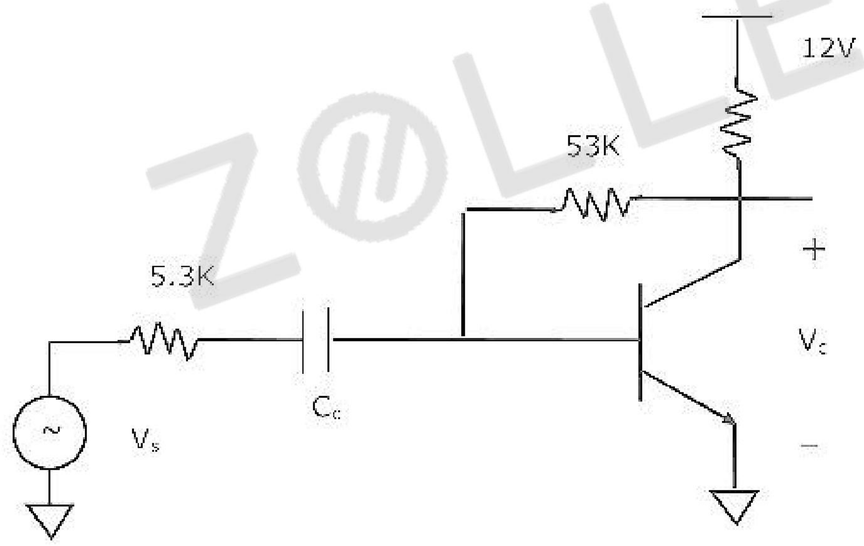

In the figure above, the ground has been shown by the symbol ∇

71. Under the DC conditions, the collector-to-emitter voltage drop is:

(A) 4.8 Volts

(B) 5.3 Volts

(C) 6.0 Volts

(D) 6.6 Volts

72. If β_{DC} is increased by 10%, the collector-to-emitter voltage drop

ZOLLEGE.in

(A) increases by less than or equal to 10%
(B) decreases by less than or equal to 10%
(C) increases by more than 10%
(D) decreases by more than 10%

73. The small-signal gain of the amplifier v_c/v_s is:
(A) -10
(B) -5.3
(C) 5.3
(D) 10

Common Data for Questions 74, 75:
Let $g(t) = p(t) * p(t)$, where $*$ denotes convolution and $p(t) = u(t) - u(t-1)$ with $u(t)$ being the unit step function

74. The impulse response of filter matched to the signal $s(t) = g(t) - \delta(t-2) * g(t)$ is given as:
(A) $s(1-t)$
(B) $-s(1-t)$
(C) $-s(t)$
(D) $s(t)$

75. An Amplitude Modulated signal is given as

$$x_{AM}(t) = 100\left(p(t) + 0.5g(t)\right)\cos\omega_c t$$

in the interval $0 \le t \le 1$. One set of possible values of the modulating signal and modulation index would be
(A) $t, 0.5$
(B) $t, 1.0$
(C) $t, 2.0$
(D) $t^2, 0.5$

Linked Answer Questions: Q.76 to Q.85 Carry Two Marks Each.

Statement for Linked Answer Questions 76 & 77:

ZOLLEGE.in

A regulated power supply, shown in figure below, has an unregulated input (UR) of 15 Volts and generates a regulated output V_{out}. Use the component values shown in the figure.

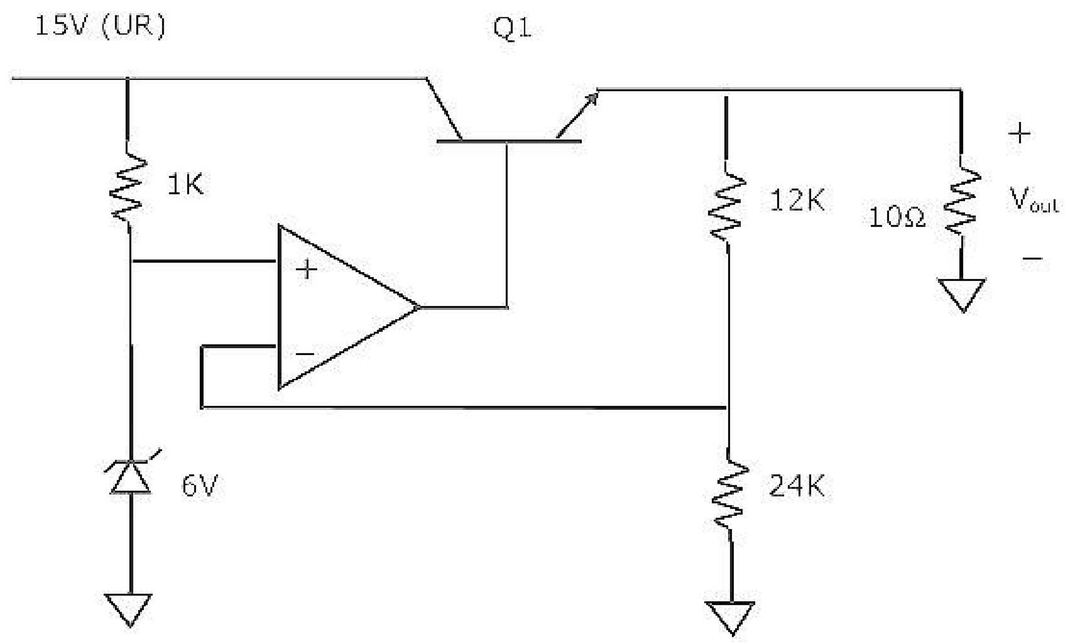

In the figure above, the ground has been shown by the symbol ∇

76. The power dissipation across the transistor Q1 shown in the figure is:
   (A) 4.8 Watts
   (B) 5.0 Watts
   (C) 5.4 Watts
   (D) 6.0 Watts

77. If the unregulated voltage increases by 20%, the power dissipation across the transistor Q1
   (A) increases by 20%
   (B) increases by 50%
   (C) remains unchanged
   (D) decreases by 20%

Statement for Linked Answer Questions 78 & 79:

The following two questions refer to wide sense stationary stochastic processes

78. It is desired to generate a stochastic process (as voltage process) with power spectral density

$$S(\omega) = \frac{16}{16 + \omega^2}$$

ZOLLEGE.in

By driving a Linear-Time-Invariant system by zero mean white noise (as voltage process) with power spectral density being constant equal to 1. The system which can perform the desired task could be:

(A) first order lowpass R-L filter

(B) first order highpass R-c filter

(C) tuned L-C filter

(D) series R-L-C filter

79. The parameters of the system obtained in Q.78 would be

(A) first order R-L lowpass filter would have R = 4Ω L = 4H

(B) first order R-C highpass filter would have R = 4Ω C = 0.25F

(C) tuned L-C filter would have L = 4H C = 4F

(D) series R-L-C lowpass filter would have R = 1Ω, L = 4H, C = 4F

Statement for Linked Answer Questions 80 & 81:

Consider the following Amplitude Modulated (AM) signal, where $f_m < B$:

$$x_{AM}(t) = 10(1 + 0.5\sin 2\pi f_m t)\cos 2\pi f_c t$$

80. The average side band power for the AM signal given above is:

(A) 25

(B) 12.5

(C) 6.25

(D) 3.125

81. The AM signal gets added to a noise with Power Spectral Density $S_n(f)$ given in the figure below. The ratio of average sideband power to mean noise power would be:

(A) $\frac{25}{8N_0B}$

(B) $\frac{25}{4N_0B}$

(C) $\frac{25}{2N_0B}$

(D) $\frac{25}{N_0B}$

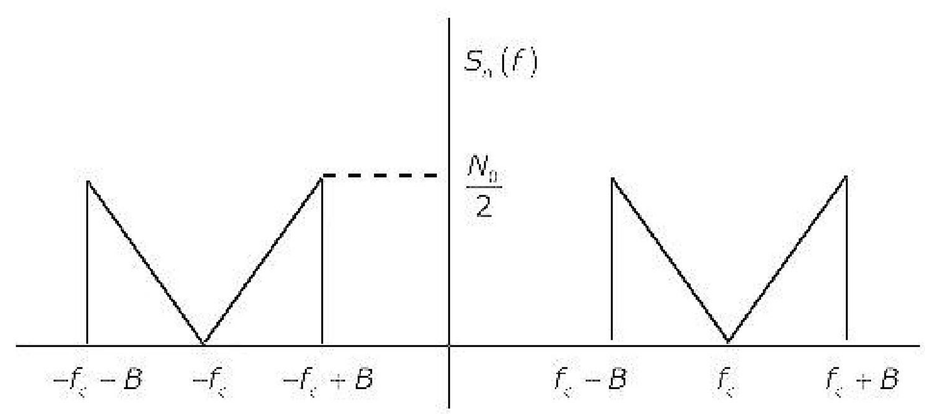

Statement for Linked Answer Questions 82 & 83:

Consider a unity-gain feedback control system whose open-loop transfer function is:

ZOLLEGE.in

$$G(s) = \frac{as+1}{s^2}$$

82. The value of "a" so that the system has a phase margin equal to $\frac{\pi}{4}$ is approximately equal to
(A) 2.40
(B) 1.40
(C) 0.84
(D) 0.74

83. With the value of "a" set for a phase-margin of $\frac{\pi}{4}$, the value of unit-impulse response of the open-loop system at $t = 1$ second is equal to
(A) 3.40
(B) 2.40
(C) 1.84
(D) 1.74

Statement for Linked Answer Questions 84 & 85:

A 30-Volts battery with zero source resistance is connected to a coaxial line of characteristic impedance of 50 Ohms at $t = 0$ second terminated in an unknown resistive load. The line length is that it takes 400 μs for an electromagnetic wave to travel from source end to load end and vice-versa. At $t = 400\mu s$, the voltage at the load end is found to be 40 Volts.

84. The load resistance is
(A) 25 Ohms
(B) 50 Ohms
(C) 75 Ohms
(D) 100 Ohms

85. The steady-state current through the load resistance is:
(A) 1.2 Amps
(B) 0.3 Amps
(C) 0.6 Amps
(D) 0.4 Amps

ZOLLEGE.in