SECTION - A

1. This question consists of TWENTY-FIVE sub-questions (1.1 – 1.25) of ONE mark each. For each of these sub-questions, four possible alternatives (A, B, C and D) are given, out of which ONLY ONE is correct. Indicate the correct answer by darkening the appropriate bubble against the question number on the left hand side of the Objective Response Sheet (ORS). You may use the answer book provided for any rough work, if needed.

1.1 If $y = |x|$ for $x < 0$ and $y = x$ for $x \geq 0$, then

(a) $\frac{dy}{dx}$ is discontinuous at x = 0

(b) y is discontinuous at x = 0

(c) y is not defined at x = 0

(d) both y and $\frac{dy}{dx}$ are discontinuous at x = 0

1.2 The sum of the infinite series, $1 + \frac{1}{2} + \frac{1}{3} + \frac{1}{4} + \ldots$ is

(a) π (b) infinity (c) 4 (d) $\frac{\pi^2}{4}$

1.3 For the following set of simultaneous equations:

$$1.5x - 0.5y = 2$$
$$4x + 2y + 3z = 9$$
$$7x + y + 5z = 10$$

(a) the solution is unique

(b) infinitely many solutions exist

(c) the equations are incompatible

(d) finite number of multiple solutions exist

1.4 The order of error is the Simpson's rule for numerical integration with a step size h is

(a) h (b) h^2 (c) h^3 (d) h^4

1.5 The temperature field in a body varies according to the equation $T(x, y) = x^3 + 4xy$. The direction of fastest variation in temperature at the point (1,0) is given by

(a) $3\hat{i} + 8\hat{j}$ (b) $\hat{i}$ (c) $0.6\hat{i} + 0.8\hat{j}$ (d) $0.5\hat{i} + 0.866\hat{j}$

ZOLLEGE.in

1.6 In a radiative heat transfer, a gray surface is one

(a) which appears gray to the eye

(b) whose emissivity is independent of wavelength

(c) which has reflectivity equal to zero

(d) which appears equally bright from all directions

1.7 The specific speed of a centrifugal compressor is generally

(a) higher than that of an axial compressor

(b) less than that of a reciprocating compressor

(c) independent of the type of compressor, but depends only on the size of the compressor

(d) more than the specific speed of the reciprocating compressor but less that of the axial compressor

1.8 Which among the following is the boiler mounting?

(a) Blow off cock (b) Feed pump

(c) Economiser (d) Superheater

1.9 For an ideal gas the epression $\left[T\left(\frac{\partial s}{\partial T}\right)p - T\left(\frac{\partial s}{\partial T}\right)v\right]$ is always equal to

(a) zero (b) $\frac{C_p}{C_v}$ (c) R (d) RT

1.10 A system undergoes a state change from 1 to 2. According the second law of thermodynamics for the process to be feasible, the entropy change, $S_2 - S_1$ of the system

(a) is positive or zero (b) is negative or zero

(c) is zero (d) can be positive, negative or zero

1.11 Kaplan turbine is

(a) a high head mixed flow turbine (b) a low axial flow turbine

(c) an outward flow reaction turbine (d) an impulse inward flow turbine

1.12 The alloying element mainly used to improve the endurance strength of steel materials is

(a) Nickel (b) Vanadium

(c) Molybdenum (d) Tungston

ZOLLEGE.in

1.13 On completion of heat treatment, the resulting structure will have retained Austenite if

(a) rate of cooling is greater than the critical cooling rate

(b) rate of cooling is less than the critical cooling rate

(c) marten site formation starting temperature is above the room temperature

(d) marten site formatin finish temperature is below the room temperature

1.14 The efficiency of a power screw is maximum when the lead angle is

(a) $\frac{\pi}{2} - \frac{r}{2}$ (b) $\frac{\pi}{2} - r$ (c) $\pi \frac{r}{2}$ (d) π - r

Note: where r is the friction angle

1.15 To restore stable operating condition in a hydrodynamic journal bearing, when it encounters higher magnitude loads,

(a) oil viscosity is to be decreased (b) oil viscosity is to be increased

(c) oil viscosity index is to be increased

(d) oil viscosity index is to be decreased

1.16 Total slip will occur in a belt drive when

(a) angle of rest is zero (b) angle of creep is zero

(c) angle of rest is greater than angle of creep

(d) angle of creep is greater than angle of rest

1.17 To make a worm drive reversible, it is necessary to increase

(a) centre distance (b) worm diameter factor

(c) number of starts (d) reduction ratio

1.18 Helix angle of fast helix drill is normally

(a) 35° (b) 60° (c) 90° (d) 5°

1.19. In a point to point control NC machine, the slides are positioned by an integrally mounted stepper motor drive. If the specification of the motor is 1°/pulse, and the pitch of the lead screw is 3.6 mm, what is the expected positioning accuracy?

(a) 1 μm (b) 10 μm (c) 50 μm (d) 100 μm

1.20. Selection electrolyte for ECM is as follows:

(a) non-passivating electrolyte for stock removal and passivating electrolyte for finish control

(b) passivating electrolyte for stock removal and non-passivating electrolyte for finish control

(c) selection of electrolyte is dependent on current density

ZOLLEGE.in

1.21. Inter electrode gap in ECG is controlled by

(a) controlling the pressure of electrolyte flow

(b) controlling the applied static load

(c) controlling the size of diamond particle in the wheel

(d) controlling the texture of the work piece

1.22. The most commonly used criteria for measuring forecast error is

(a) mean absolute deviation (b) mean absolute percentage error

(c) mean standard error (d) mean square error

1.23. Setup costs do not include

(a) labour cost of setting up machines (b) ordering cost of raw material

(c) maintenance cost of the machines (d) cost of processing the work piece

1.24. A dummy activity is used in PERT network to describe

(a) precedence relationship (b) necessary time delay

(c) resource restriction (d) resource idleness

1.25 The cost of providing service in a queuing system increases with

(a) increased mean time in the queue (b) increased arrival rate

(c) decreased mean time in the queue (d) decreased arrival rate

2. This question consists of TWENTY-FIVE sub-questions (2.1 – 2.25) of TWO marks each. For each of these sub-questions, four possible alternatives (A,B, C and D) are given, out of which ONLY ONE is correct. Indicate the correct answer by darkening the appropriate bubble against the question number on the left hand side of the Objective Response Sheet (ORS). You may use the answer book provided for any rough work, if needed.

2.1 A box contains 5 black balls and 3 red balls. A total of three balls are picked from the box one after another, without replacing them back. The probability of getting two black balls and one red ball is

(a) $\frac{3}{8}$ (b) $\frac{2}{15}$ (c) $\frac{15}{28}$ (d) $\frac{1}{2}$

2.2. A triangle ABC consists of vertex points A(0,0) B(1,0) and C(0,1). The value of the integral $\int\int 2x dx dy$ over the triangle is

(a) 1 (b) $\frac{1}{3}$ (c) $\frac{1}{8}$ (d) $\frac{1}{9}$

ZOLLEGE.in

2.3. Refer to figure 2.3, the absolute pressure of gas A in the bulb is:

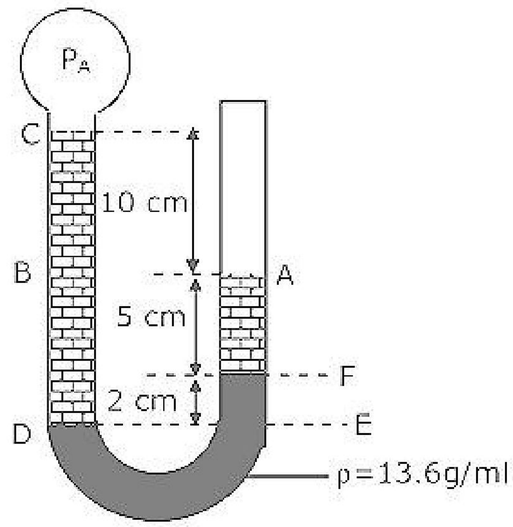

(a) 771.2 mm Hg (b) 752.65 mm Hg (c) 767.35 mm Hg (d) 748.8 mm Hg

2.4. The Reynolds number for flow of a certain fluid in a circular tube is specified as 2500. What will be the Reynolds number when the tube diameter is increased by 20% and the fluid velocity is decreased by 40% keeping fluid the same?

(a) 1200 (b) 1800 (c) 3600 (d) 200

2.5. In a certain heat exchanger, both the fluids have identical mass flow rate-specific heat product. The hot fluid enters at 76°C and leaves at 47°C and the cold fluid entering at 26°C leaves at 55°C. The effectiveness of the heat exchanger is

(a) 0.16 (b) 0.58 (c) 0.72 (d) 1.0

2.6. The following data pertain to a single stage impulse steam turbine:

Nozzle angle = 20° Blade velocity = 200 m/s

Relative steam velocity at entry = 350 m/s Blade inlet = 30°

Blade exit angle = 25°

If blade friction is neglected, the work done per kg steam is:

(a) 124 kJ (b) 164 kJ (c) 169 kJ (d) 174 kJ

2.7. Consider an actual regenerative Rankine cycle with one open feed water heater. For each kg steam entering the turbine, if m kg steam with a specific enthalpy of h_1 is bled from the turbine, and the specific enthalpy of liquid water entering the heater is h_2, then h_3 specific enthalpy of saturated liquid leaving the heater is equal to

(a) $mh_1 - (h_2 - h_1)$ (b) $h_1 - m(h_2 - h_1)$

(c) $h_2 - m(h_2 - h_1)$ (d) $mh_2 - (h_2 - h_1)$

ZOLLEGE.in

2.8. Consider a two stage reciprocating air compressor with a perfect intercooler operating at the best intermediate pressure. Air enters the low-pressure cylinder at 1 bar, 27°C and leaves the high-pressure cylinder at 9 bar. Assume the index of compression and expansion in each stage is 1.4, and that for air R = 286.7 J/kg K, the work done per kg air in the high pressure cylinder is:

(a) 111 kJ (b) 222 kJ (c) 37 kJ (d) 74 kJ

2.9. Clearance volume of a reciprocating compressor is 100 ml, and the volume of the cylinder at bottom dead centre is 1.0 litre. The clearance ratio of the compressor is

(a) $\frac{1}{11}$ (b) $\frac{1}{10}$ (c) $\frac{1}{9}$ (d) $\frac{1}{12}$

2.10. A mass of 35 kg is suspended from a weightless bar AC, which is supported by a cable CB and a pin at A as shown in the Figure. The pin reactions at A on the bar AB are

(a) $R_X = 343.4N$, $R_y = 755.4N$

(b) $R_X = 343.4N$, $R_y = 0$

(c) $R_X = 755.4N$, $R_y = 343.4N$

(d) $R_X = 755.4N$, $R_y = 0$

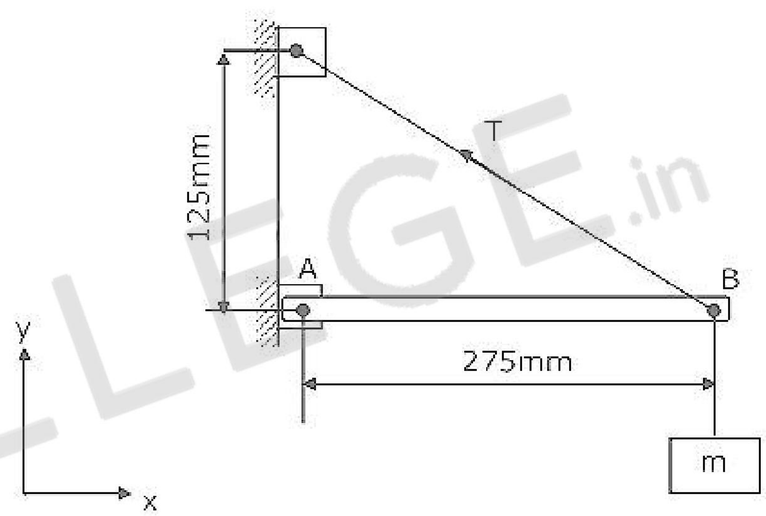

2.11. A small element at the critical section of a component is in a bi-axial state of stress with the two principal stresses being 360 MPa and 140 MPa. The maximum working stress according to Distortion Energy Theory is:

(a) 220 MPa (b) 110 MPa (c) 314 MPa (d) 330 MPa

2.12. The cross head velocity in the slider crank mechanism, for the position shown in figure 2.12 is:

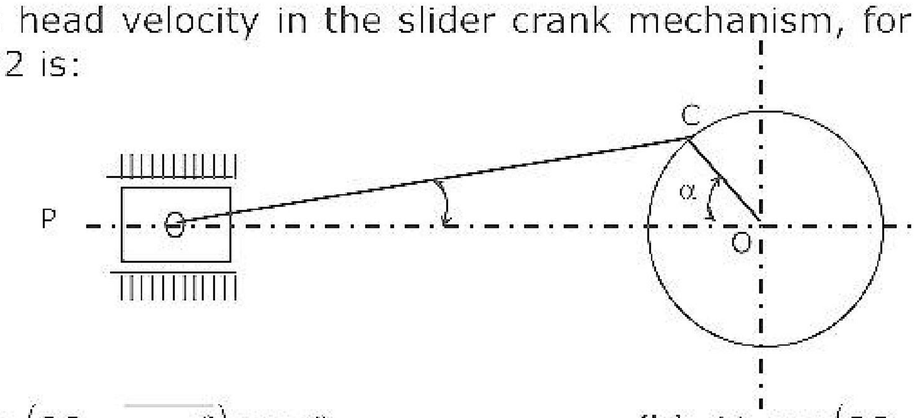

(a) $V_C \cos(90 - \overline{\alpha + \beta}) \cos\beta$ (b) $V_C \cos(90 - \overline{\alpha + \beta}) \sec\beta$

(c) $V_C \cos(90 - \overline{\alpha - \beta}) \cos\beta$ (d) $V_C \cos(90 - \overline{\alpha - \beta}) \sec\beta$

ZOLLEGE.in

2.13. The dynamic load capacity of 6306 bearing is 22 kN. The maximum radial load it can sustain to operate at 600 rev/min, for 2000 hours is:

(a) 4.16 kN (b) 3.60 kN (c) 6.25 Kn (d) 5.29 kN

2.14. The percentage improvement in power capacity of a flat belt drive, when the wrap angle at the driving pulley is increased from 150° to 210° by an idler arrangement for a friction coefficient of 0.3 is:

(a) 25.21 (b) 33.92 (c) 40.17 (d) 67.85

2.15. In a typical metal cutting operation, using a cutting tool of positive rake $\gamma = 10°$, it was observed that the shear angle was 20°. The friction angle is

(a) 45° (b) 30° (c) 60° (d) 40°

2.16. A cutting tool has a radius of 1.8 mm. The feed rate for a theoretical surface roughness of $R_a = 5\mu m$ is

(a) 0.36 mm/rev (b) 0.187 mm/rev

(c) 0.036 mm/rev (d) 0.0187 mm/rev

2.17. Three blocks B_1, B_2 and B_3 are to be inserted in a channel of width S maintaining a minimum gap of with T = 0.125 mm, as shown in Figure 2.17. For P = 18.75 ±0.08; Q = 25.00±0.12; R = 28.125±0.1 and S=72.35+X, (where all dimensions are in mm), the tolerance X is:

(a) +0.38 (b) −0.38

(c) +0.05 (d) -0.05

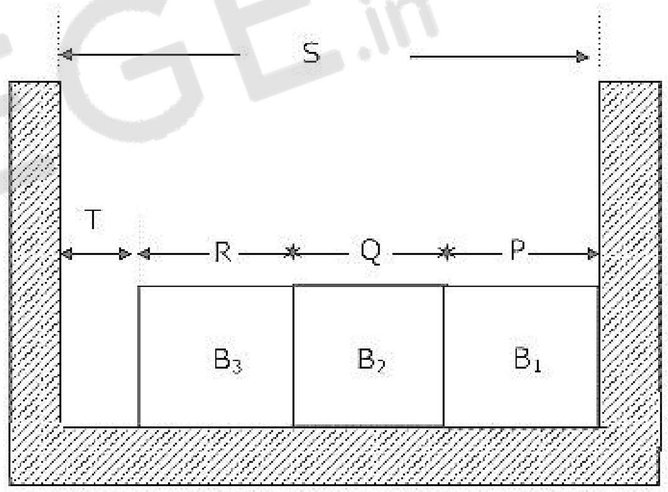

2.18. In a forecasting model, at the end of period 13, the forecasted value for period 14 is 75. Actual value in the periods 14 to 16 are constant at 100. if the assumed simple exponential smoothing parameter is 0.5, then the MSE at the end of period 16 is:

(a) 820.31 (b) 273.44 (c) 43.75 (d) 14.58

2.19. A machine is purchased for Rs.32,000, and its assumed life is 20 years. The scrap value at the end of its life is Rs.8,000. If the depreciation is charged by the diminishing balance method, then the percentage reduction in its value, at the end of the first year is:

(a) 6.7% (b) 7.1% (c) 7.2% (d) 7.6%

ZOLLEGE.in

2.20. A 750 hours life test is performed on ten components. If one component fails after 350 hours of operation and all others survive the test, then the failure per hour is

(a) 0.000141 (b) 0.000133 (c) 0.00141 (d) 0.00133

3. Match 4 correct pairs between List I and List II for questions 3.1 to 3.5 below. No credit will be given for partial matching. Write your answers using only the letters A to D and numbers 1 to 6.

3.1

List I	List II
(A) Steam nozzle	(1) Match Number
(B) Compressible flow	(2) Reaction Turbine
(C) Surface tension	(3) Biot Number
(D) Heat conduction	(4) Nusselt Number
	(5) Super saturation
	(6) Weber Number

3.2

List I	List II
(A) Liquid to suction heat exchanger	(1) Vapour absorption refrigeration
(B) Constant volume heat addition	(2) Vapour compression refrigeration
(C) Normal stock	(3) Diesel cycle
(D) Ammonia water	(4) Otto cycle
	(5) Converging nozzle
	(6) Converging – diverging nozzle.

3.3

List I	List II
(A) Surface profilometer	(1) Calibration
(B) Light Section Microscope	(2) Form tester
(C) Microkater	(3) Film thickness measurement
(D) Interferometer	(4) Centre line average
	(5) Comparator
	(6) Surface by measurement

ZOLLEGE.in

3.4

List I	List II
(A) Grinding	(1) Surface for oil retention
(B) Honing	(2) Surface of maximum load capacity
(C) Superfinishing	(3) Surface of limiting friction
(D) Burnishing	(4) Surface of matte finish
	(5) Surface for pressure sealing
	(6) Surface for interference fit

3.5

List I	List II
(A) Automobile wheel mounting on axle	(1) Magneto bearing
(B) High speed grinding spindle	(2) Angular contact bearing
(C) I.C. engine connecting rod	(3) Taper roller bearing
(D) Leaf spring eye mounting	(4) Hydrodynamic journal bearing
	(5) Sintered metal bearing
	(6) Taflon/Nylon bush

4. Solve the initial value problem $\frac{d^2y}{dx^2} - 4\frac{dy}{dx} + 3y = 0$ with $y = 3$ and $\frac{dy}{dx}$ at $x = 0$ using the Laplace transform technique.

5. In a standard vapour compression refrigeration cycle, operating between an evaporator temperature of −10°C and a condensor temperature of 40°C, the enthalpy of the refrigerant, Freon – 12, at the end of compression is 220 kJ/kg. Show the cycle diagram on T-s plane.

Calculate

(a) the COP of the cycle

(b) the refrigerating capacity and the compressor power assuming a refrigerant flow rate of 1 kg/min.

You may use the extract of the Freon – 12 property table given below.

t(°C)	p(MPa)	h_f (kJ/kg)	h_g (kJ/kg)
-10	0.2191	26.85	183.1

ZOLLEGE.in

6. A component in an aircraft flap actuator can be adequately modeled as a cylindrical bar subjected to an axial force of 8.0 kN, a bending moment of 55 Nm and a torsional moment of 30 Nm. A 20 mm diameter solid bar of 7075 – T 6 aluminium having $S_{ut} = 591\ MPa, S_{yp} = 542\ MPa$ and $S_{syp} = 271\ MPa$ is recommended for its use. Determine the factor of safety available as per stress strain theory.

7. Balls of diameter 30 mm and 15 mm were use to measure the taper of a ring gauge. During inspection, the ball of 30 mm diameter was protruding by 2.5 mm above the top surface of the ring. This surface was located at a height of 50 mm from the top of the 15 mm diameter ball. Calculate the taper angle.

8. Determine the number of production runs and also the total incremental cost in a factory for the data given below.

Annual requirement	=	15,000 units
Preparation cost per order	=	Rs.25
Inventory holding cost	=	Rs.5/unit/year
Production rate	=	100 units/day
Number of working days	=	250/year

SECTION – B

This section consists of TWENTY questions of FIVE marks each. Attempt ANY FIFTEEN questions. Answers must be given in the answer book provided. Answer for each question must start on a fresh page and must appear at one place only. (Answers to all parts of a question must appear together).

9. In a certain double pipe heat exchanger, hot water flows at a rate of 50,000 kg/h and gets cooled from 95° to 65°. At the same time 50,000 kg/h of cooling water at 30°C enters the heat exchanger. The flow conditions are such that the overall heat transfers area required and the effectiveness, assuming the two streams are in parallel flow. Assume for both the streams $C_p = 4.2 kJ/kgK$.

10. The power output of an I.C. engine is measured by a rope brake dynamometer. The diameter of the brake pulley is 700 mm and the rope diameter is 25 mm. The load on the tight side of the rope is 50 kg. mass and the spring balance reads 50 N. The engine running at 900 rev/min consumes the fuel, of calorific value 44000 kJ/kg, at a rate of 4 kg/h. Assume g = 9.8 m/s^2. Calculate

    (a) brake specific fuel consumption

    (b) brake thermal efficiency

11. At a place where the surroundings are at 1 bar 27°C, a closed rigid thermally insulated tank contains 2 kg air at 2 bar, 27°C. This air is then churned for a while, by a paddle wheel connected to an external motor. If it is given that the irreversibility of the process is 100 kJ, find the final temperature and the increase in availability of air. Assume for air $C_p = 0.718 kJ/kgK$

ZOLLEGE.in

12. In an air-standard regenerative gas turbine cycle, the pressure ratio is 5. Air enters the compressor at 1 bar, 300 K and leaves at 490 K. the maximum temperature in the cycle is 1000 K. Calculate the cycle efficiency, given that the efficiency of the regenerator and the adiabatic efficiency of the turbine are each 80%. Assume for air, the ratio of specific heats is 1.4. Also, show the cycle on a T-s diagram.

13. Air enters a frictionless adiabatic converging nozzle at 10 bar, 500 K with negligible velocity. The nozzle discharges to a region at 2 bar. If the exit area of the nozzle is 2.5 cm^2, find the flow rate of air through the nozzle. Assume for air, C_p = 1005 J/kg K and C_v=718 J/kg K.

14. A water turbine delivering 10 MW power is to be tested with the help of a geometrically similar 1:8 model, which runs at the same speed as the proto-type.
    (a) Find the power developed by the model assuming the efficiencies of the model and the proto-type are equal.
    (b) Find the ratio of the heads and the ratio of mass flow rates between the proto-type and the model.

15. A spherical pressure vessel of 600 mm internal diameter is made of 3 mm thick cold drawn sheet steel with static strength properties of S_{ut} = 440 *MPa* and S_{yp} = 370 *MPa*. Determine the maximum pressure for
    (a) static yielding, and
    (b) eventual fatigue failure, when the pressure fluctuates between 0 and p_{max}, when yielding is also not permitted (Do not apply any factor of safety).

16. A full journal bearing, 200 mm in diameter and 200 mm long, is to support a radial load of 45 kN at an operating speed of 960 rev/min. If it is to operate at a Sommerfeld number of 0.08 when the radial clearance is 0.2 mm, determine the viscosity of the oil to be used. Estimate also the power loss in the bearing if the resulting coefficient of friction value is 0.00315.

    (Note: Sommerfeld number is bearing characteristic number with speed in rev/s).

17. A multiple disc clutch is to transmit 4 kW at 750 rev/min. Available steel and bronze discs of 40 mm inner radius and 70 mm outer radius are to be assembled alternatively in appropriate numbers. The clutch is to operate in oil with an expected coefficient of friction of 0.1 and the maximum allowable pressure is not to exceed 350 kPa. Assume uniform wear condition to prevail and specify the number of steel (Driving) and bronze (driven) discs required. Also determine what axial force is to be applied to develop the full torque.

ZOLLEGE.in

18. A single stage spur gear reducer is found to have a pinion with 15 teeth and top (addendum) diameter of 85 mm. The mating gear has 33 teeth and 175 mm tip diameter. If the gears are supposed to have standard 20° pressure angle full depth involute teeth, what should be the module and centre distance between them. Supported by due calculations state whether there is interference or not.

19. A shaft of uniform cross section carries a single concentrated mass at its centre and is found to have a first critical speed of 1400 rev/min. As the operating speed is to be 1440 rev/min, the critical speed is to be enhanced and a naïve designer has suggested to go in for a hollow shaft with an inner diameter of 0.75 D. Give your comments on the suggestion and show by due calculation whether this will meet the requirement or not.

20. The suspension system of a two-wheeler can be equated to a single spring-mass system with a viscous damper connected in series. Sketch the free body diagram and give the equations of motion. For a mass m = 50 kg and a spring with a stiffness of 35 kN/m, determine what should be the damping coefficient (damping constant) for critical damping. What can be the damping force for a plunger velocity of 0.05 m/s?

21. In a turning trial using orthogonal tool geometry, a chip length of 84 mm was obtained for an uncut chip length of 200 mm. The cutting conditions were:

    V = 30 m/min, α = 0.5 mm, rake angle = 20°, cutting tool is HSS.

    Estimate the shear plane angle ϕ, chip thickness and the shear plane angle for minimum chip strain.

22. (a) Sketch the influence of cutting speed on machining performance and mark the High Efficiency Range in the same.

    (b) A 'Throw-away' carbide insert was used to machine a steel work piece with a cutting speed of 60 m/min and a tool life was reduced to 10 min. using this data, estimate the cutting speed for maximum productivity, if the tool change time is 2 minutes.

23. A metal strip is to be rolled from an initial wrought thickness of 3.5 mm to a final rolled thickness of 2.5 mm in a single pass rolling mill having rolls of 250 mm diameter. The strip is 450 mm wide. The average coefficient of friction in the roll gap is 0.08. taking plane-strain flow stress of 140 MPa, for the metal, and assuming negligible spreading, estimate the roll separating force.

24. (a) Welding of C40 steel plate of 10 mm thickness required a current of 16 amps, while it was 360 amps when the plate thickness was increased by 50%. Estimate the welding current for 8 mm thickness of same material.

    (b) Estimate the reduction in piercing load for producing circular hole of 50 mm diameter in a 3 mm thick steel strip, when the punch was provided with a shear of 1 mm. Assume 30% penetration and shear strength of steel as 400 N/mm^2

ZOLLEGE.in

25. A project plan is given below:

Activity	Time duration in weeks	Predecessors
A	2	None
B	2	None
C	7	A
D	12	A
E	10	B
F	3	D,E
G	4	C,F

(a) Construct a PERT network.

(b) Find the critical path and estimate the project duration.

26. A Gantt plan with an 80% guarantee is used on a job that is 30% process controlled. The plan uses a standard hourly rate of Rs.20 and a bonus rate of Rs.25 per hour. The standard time for the job is 0.1 hour/piece. Determine the earnings for a worker per day (8 hours) of work, if 85 pieces were produced on a given day. Comment on the merit of this plan.

27. People arrive at a hotel in a Poisson distributed arrival rate of 8 per hour. Service time distribution is closely approximated by the negative exponential. The average service time is 5 minutes. Calculate

(a) the mean number in the waiting line

(b) the mean number in the system

(c) the waiting time in the queue

(d) the mean time in the system, and

(e) the utilization factor.

28. A company rents three warehouses A, B and C from which they supply bearings to two customers P and Q. The profit per piece, the annual demands of the customers and the supplies available from the warehouses are shown below:

	P	Q	Supply
A	3	4	4000
B	2	3	4000
C	5	4	3000
Demand	6000	6000	

As the company is not able to meet the demands, it is proposed to replace warehouse C with a warehouse rented at D whose supply capacity would be 5000. The expected profit would be Rs.6 and Rs.5 per piece distributed to P and Q respectively. The rental charges for warehouse D is Rs.5,000 per year. Find the

ZOLLEGE.in