## SECTION - A

1. For each of the following (1.1 – 1.40) four alternatives (A, B, C and D) are given, out of which ONLY ONE is correct. Indicate the correct answer by writing (A, B, C or D) as appropriate, against the corresponding question number in the answer book.

1.1 A network has 7 nodes and 5 independent loops. The number of branches in the network is

(a) 13 (b) 12 (c) 11 (d) 10

1.2 The eigen values of the matrix $A = \begin{bmatrix} 0 & 1 \\ 1 & 0 \end{bmatrix}$ are

(a) 1,1 (b) -1,-1 (c) j,-j (d) 1,-1

1.3 If $f(t) = \dfrac{\omega}{s^2 + \omega^2}$, then the value of $\lim_{t \to \infty} f(t)$

(a) cannot be determined (b) is zero
(c) is unity (d) is infinite

1.4 The trigonometric Fourier series of a periodic time function can have only

(a) cosine terms (b) sine terms
(c) cosine and sine terms (d) d.c. and cosine terms

1.5 The nodal method of circuit analysis is based on

(a) KVL and Ohm's law (b) KCL and Ohm's law
(c) KCL and KVL (d) KCL, KVL and Ohm's law

1.6 Superposition theorem is NOT applicable to networks containing

(a) nonlinear elements (b) dependent voltage sources
(c) dependent current sources (d) transformers

1.7 The parallel RLC circuit shown in Fig.1.7 is in resonance. In this cicuit

(a) $|I_R| < 1mA$
(b) $|I_R + I_L| > 1mA$
(c) $|I_R + I_C| < 1mA$
(d) $|I_R + I_C| > 1mA$

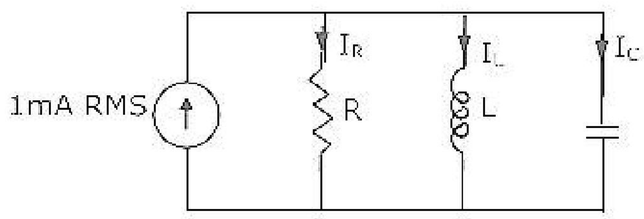


ZOLLEGE.in

1.8 A periodic signal x(t) of period $T_o$ is given by

$$x(t) = \begin{cases} 1, & |t| < T_1 \\ 0, & T_1 < |t| < \frac{T_o}{2} \end{cases}$$

The d.c. component of x(t) is

(a) $\frac{T_1}{T_0}$ (b) $\frac{T_1}{2T_0}$ (c) $\frac{2T_1}{T_0}$ (d) $\frac{T_0}{T_1}$

1.9 The unit impulse response of a linear time invariant system is the unit step function u(t). For t>0, the response of the system ot an excitation $e^{-at}u(t), a > 0$ will be

(a) $ae^{-at}$ (b) $\left(\frac{1}{a}\right)\left(1-e^{-at}\right)$ (c) $a\left(1-e^{-at}\right)$ (d) $1-e^{-at}$

1.10 The short-circuit admittance matrix of a two-port network is $\begin{bmatrix} 0 & \frac{-1}{2} \\ \frac{1}{2} & 0 \end{bmatrix}$

The two port network is

(a) non-reciprocal and passive (b) non-reciprocal and active

(c) reciprocal and passive (d) reciprocal and active

1.11 The voltage across the terminals a and b in Fig.1.11 is

(a) 0.5 V

(b) 3.0 V

(c) 3.5 V

(d) 4.0 V

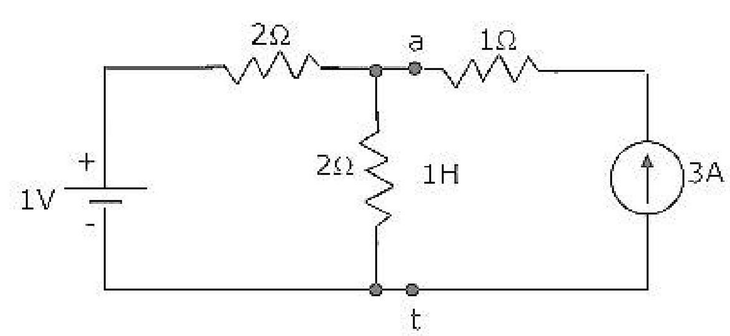


1.12 The electron and hole concentrations in a intrinsic semiconductor are $n_i$ and $p_i$ respectively. When doped with a p-type material, these change to n and p, respectively. Then

(a) $n + p = n_i + p_i$ (b) $n + n_i = p + p_i$ (c) $np_i = n_i p$ (d) $np = n_i p_i$

1.13 If $f_T$ of BJT is related to its $g_m, C_\pi$ and $C_\mu$ as follows:

(a) $f_T = \frac{C_\pi + C_\mu}{g_m}$ (b) $f_T = \frac{e\pi\left(C_\pi + C_\mu\right)}{g_m}$

(c) $f_T = \frac{g_m}{C_\pi + C_\mu}$ (d) $f_T = \frac{g_m}{2\pi\left(C_\pi + C_\mu\right)}$

ZOLLEGE.in

1.14 The static characteristic of an adequately forward biased p-n junction is a straight line, if the plot is of

(a) log I vs. log V (b) log I vs. V (c) I vs. log V (d) I vs. V

1.15 A long specimen of p-type semiconductor material

(a) is positively charged

(b) is electrically neutral

(c) has an electric field directed along its length

(d) acts as a dipole

1.16 The Z-transform of the time function $\sum_{k=0}^{\infty} \delta(n-k)$ is

(a) $\frac{Z-1}{Z}$ (b) $\frac{Z}{Z-1}$ (c) $\frac{Z}{(Z-1)^2}$ (d) $\frac{(Z-1)^2}{Z}$

1.17 The number of roots of $s^3 + 5s^2 + 7s + 3 = 0$ in the left half of the s-plane is

(a) zero (b) one (c) two (d) three

1.18 The transfer function of a tachometer is of the form

(a) Ks (b) $\frac{K}{s}$ (c) $\frac{K}{(s+1)}$ (d) $\frac{K}{s(s+1)}$

1.19. Consider a unity feedback control system with open-loop transfer function $G(s) = \frac{K}{s(s+1)}$. The steady state error of the system due to a unit step input is

(a) zero (b) K (c) $\frac{1}{K}$ (d) infinite

1.20. The transfer function of a zero-order-hold system is

(a) $\left(\frac{1}{s}\right)\left(1 + e^{-sT}\right)$ (b) $\left(\frac{1}{s}\right)\left(1 - e^{-sT}\right)$

(c) $1 - \left(\frac{1}{s}\right)e^{-sT}$ (d) $1 + \left(\frac{1}{s}\right)e^{-sT}$

1.21. In the Bode-plot of a unity feedback control system, the value of phase of G(jω) at the gain cross over frequency is –125°. The phase margin of the system is

(a) -125° (b) -55° (c) 55° (d) 125°

ZOLLEGE.in

1.22. Consider a feedback control system with loop transfer fucntion

$$G(s)H(s) = \frac{K(1+0.5s)}{s(1+s)(1+2s)}$$

The type of the closed loop system is

(a) zero (b) one (c) two (d) three

1.23. The transfer function of a phase lead controller is $\frac{1+3Ts}{1+Ts}$. The maximum value of phase provided by this controller is

(a) 90° (b) 60° (c) 45° (d) 30°

1.24. The Nyquist plot of a phase transfer function g(jω) H(jω) of a system encloses the (-1,0) point. The gain margin of the system is

(a) less than zero (b) zero

(c) greater than zero (d) infinity

1.25 The transfer function of a system is $\frac{2s^2+6s+5}{(s+1)^2(s+2)}$

The characteristic equation of the system is

(a) $2s^2+6s+5=0$ (b) $(s+1)^2(s+2)=0$

(c) $2s^2+6s+5+(s+1)^2(s+2)=0$ (d) $2s^2+6s+5-(s+1)^2(s+2)=0$

1.26 In a synchro error detector, the output voltage is proportional to $|\omega(t)|^n$, where $\omega(t)$ is the rotor velocity and n equals

(a) -2 (b) -1 (c) 1 (d) 2

1.27 Two identical FETs, each characterissed by the parameters $g_m$ and $r_d$ are connected in parallel. The composite FET is then characterized by the parameters

(a) $\frac{g_m}{2}$ and $2r_d$ (b) $\frac{g_m}{2}$ and $\frac{r_d}{2}$ (c) $2g_m$ and $\frac{r_d}{2}$ (d) $2g_m$ and $2r_d$

1.28 The circuit of Fig.1.28 is an example of feedback of the following type

(a) current series

(b) current shunt

(c) voltage series

(d) voltage shunt

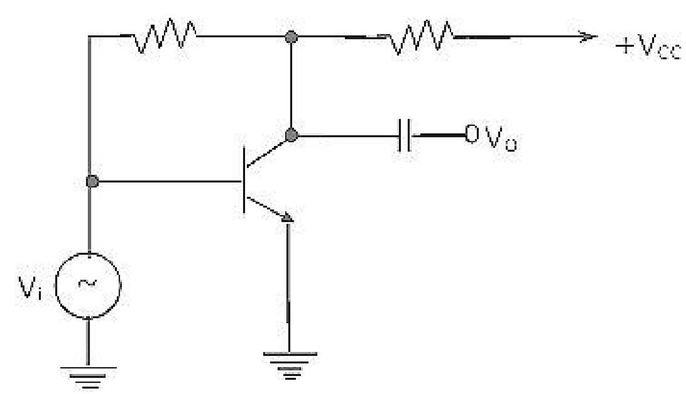


ZOLLEGE.in

1.29 In a differential amplifier, CMRR can be improved by using an increased

(a) emitter resistance (b) collector resistance

(c) power supply voltages (d) source resistance

1.30 From a measurement of the rise time of the output pulse of an amplifier whose input is a small amplitude square wave, one can estimate the following parameter of the amplifier:

(a) gain-bandwidth product (b) slow rate

(c) upper 3-dB frequency (d) lower 3-dB frequency

1.31 A distorted sinusoidal has the amplitudes $A_1, A_2, A_3 \ldots$ of the fundamental, second harmonic, third harmonic, ... respectively. The total harmonic distortion is

(a) $\dfrac{A_2 + A_3 + \ldots}{A_1}$ (b) $\dfrac{\sqrt{A_2^2 + A_3^2 + \ldots}}{A_1}$

(c) $\dfrac{\sqrt{A_2^2 + A_3^2 + \ldots}}{\sqrt{A_1^2 + A_2^2 + A_3^2 \ldots}}$ (d) $\left(\dfrac{A_2^2 + A_3^2 + \ldots}{A_1}\right)$

1.32 The emitter coupled pair of BJT's gives a linear transfer relation between the differential output voltage and the differential input voltage $V_{id}$ only when the magnitude of $V_{id}$ is less $\alpha$ times the thermal voltage, where $\alpha$ is

(a) 4 (b) 3 (c) 2 (d) 1

1.33 In a shunt-shunt negative feedback amplifier, as compared to the basic amplifier

(a) both, input and output impedances, decrease

(b) input impedance decreases but output impedance increases

(c) input impedance increases but output impedance decreases

(d) both, input and output impedances increase

1.34 A multistage amplifier has a low-pass response with three real poles at $s = -\omega_1$, $-\omega_2$ and $\omega_3$. The approximate overall bandwidth B of the amplifier will be given by

(a) $B = \omega_1 + \omega_2 + \omega_3$ (b) $\dfrac{1}{B} = \dfrac{1}{\omega_1} + \dfrac{1}{\omega_2} + \dfrac{1}{\omega_3}$

(c) $B = (\omega_1 + \omega_2 + \omega_3)^{\frac{1}{3}}$ (d) $B = \sqrt{\omega_1^2 + \omega_2^2 + \omega_3^2}$

ZOLLEGE.in

1.35 A high Q-quartz crystal exhibits series resonance at the frequency $\omega_s$ and parallel resonance at the frequency $\omega_p$. Then

(a) $\omega_s$ is very close to, but less than $\omega_p$.
(b) $\omega_s$ $\omega_p$.
(c) $\omega_s$ is very close to, but greater than $\omega_p$.
(d) $\omega_s$ $\omega_p$.

1.36 One input terminal of high gain comparator circuit is connected to ground and a sinusoidal voltage is applied to the other input. The output of comparator will be

(a) a sinusoid
(b) a full rectified sinusoid
(c) a half rectified sinusoid
(d) a square wave

1.37 In a series regulated power supply circuit, the voltage gain $A_v$ of the 'pass' transistor satisfies the condition:

(a) $A_v \to \infty$
(b) $1$ $A_v < \infty$
(c) $A_v = 1$
(d) $A_v$ $1$

1.38 For full wave rectification, a four diode bridge rectifier is claimed to have the following advantages over a two diode circuit:

(1) less expensive transformer
(2) smaller size transformer, and
(3) suitability for higher voltage application.

Of these,

(a) only (1) and (2) are true
(b) only (1) and (3) are true
(c) only (2) and (3) are true
(d) (1), (2) as well as (3) are true

1.39 In the MOSFET amplifier of Fig.1.39, the signal outputs $V_1$ and $V_2$ obey the relationship

(a) $V_1 = \frac{V_2}{2}$
(b) $V_1 = \frac{V_2}{2}$
(c) $V_1 = 2V_2$
(d) $V_1 = -2V_2$

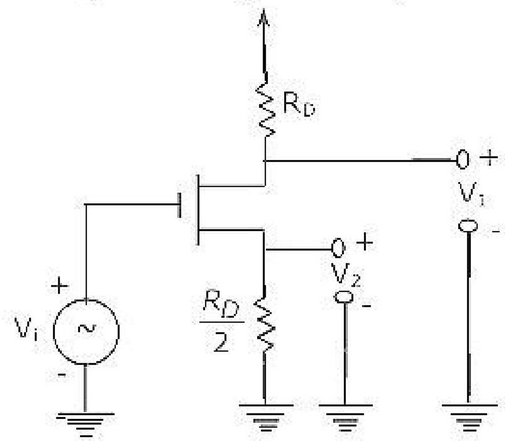


1.40 the units of $\frac{q}{kT}$ are

(a) V
(b) $V^{-1}$
(c) J
(d) $\frac{J}{K}$

ZOLLEGE.in

**2.** For each of the following (2.1 – 2.40) four alternatives (A, B, C and D) are given, out of which ONLY ONE is correct. Indicate the correct answer by writing (A, B, C or D) as appropriate, against the corresponding question number in the answer book.

2.1 The minimum number of 2-input NAND gates required to implement the Boolean function $Z = A\,\bar{B}\,C$, assuming that A, B and C are available, is

(a) two (b) three (c) five (d) six

2.2 The noise margin of a TTL gate is about

(a) 0.2 V (b) 0.4 V (c) 0.6 V (d) 0.8 V

2.3 In Fig.2.3, A = 1 and B =1, the input B is now replaced by a sequence 101010.... the outputs x and y will be

(a) fixed at 0 and 1, respectively

(b) x = 1010 .... while y = 0101 ....

(c) x = 1010 .... and y = 0101 ....

(d) fixed at 1 and 0, respectively

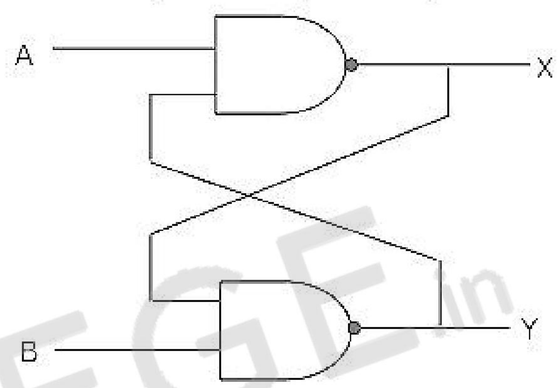


2.4 An equivalent 2's complement representation of the 2's complement number 1101 is

(a) 110100 (b) 001101 (c) 110111 (d) 111101

2.5 The threshold voltage for each transistor in Fig.2.5, is 2V. For this circuit to work as an inverter, $V_i$ must take the values

(a) -5 V and 0 V

(b) -5 V and 5 V

(c) -0 V and 3 V

(d) 3 V and 5 V

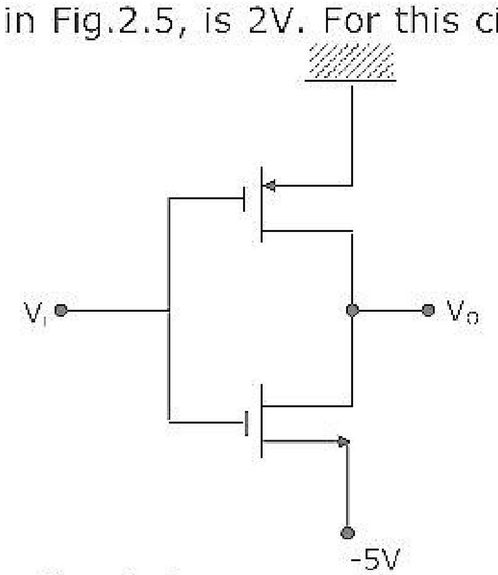


2.6 An I/O processor control the flow of information between

(a) cache memory and I/O devices (b) main memory and I/O devices

(c) two I/O devices (d) cache and main memories

ZOLLEGE.in

2.7 Two 2's complement number having sign bits x and y are added and the sign bit of the result is z. Then, the occurrence of overflow is indicated by the Boolean function

(a) x y z
(b) $\bar{x}\,\bar{y}\,\bar{z}$
(c) $\bar{x}\,\bar{y}\,z + x\,y\,\bar{z}$
(d) xy + yz + zx

2.8 The advantage of using a dual slope ADC in a digital voltmeter is that

(a) its conversion time is small
(b) its accuracy is high
(c) it gives output in BCD format
(d) it does not require a comparator

2.9 For the identify $AB + \bar{A}C + BC = AB + \bar{A}C$, the dual form is

(a) $(A+B)(\bar{A}+C)(B+C) = (A+B)(\bar{A}+C)$
(b) $(\bar{A}+\bar{B})(A+\bar{C})(\bar{B}+\bar{C}) = (\bar{A}+\bar{B})(A+\bar{C})$
(c) $(A+B)(\bar{A}+C)(B+C) = (\bar{A}+\bar{B})(A+\bar{C})$
(d) $\bar{A}\,\bar{B} + A\,\bar{C} + \bar{B}\,\bar{C} = \bar{A}\,\bar{B} + A\,\bar{C}$

2.10 An instruction used to set the carry Flag in a computer can be classified as

(a) data transfer
(b) arithmetic
(c) logical
(d) program control

2.11 Fig.2.11 shows a mod-K counter, here K is equal to

(a) 1
(b) 2
(c) 3
(d) 4

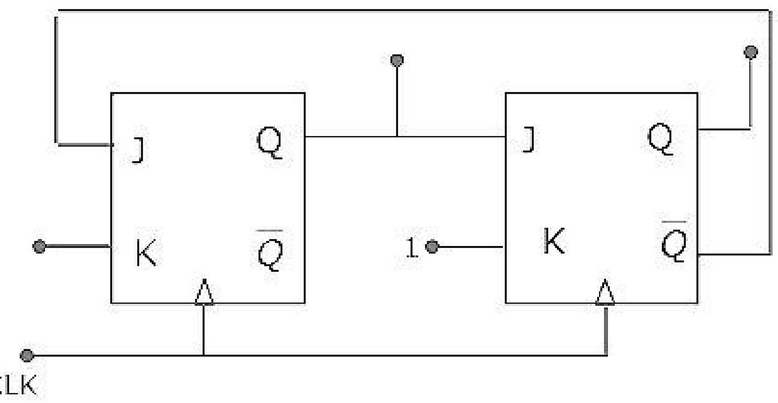


2.12 The current I through resistance r in the circuit shown in Fig.2.12 is

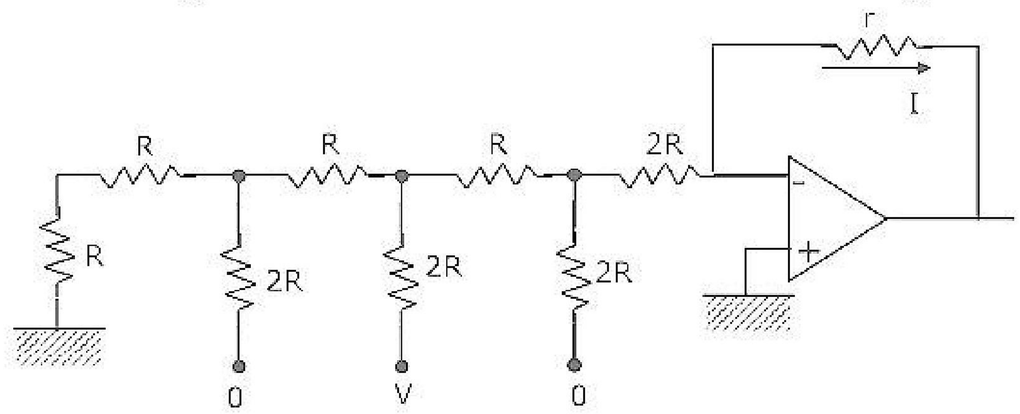


(a) $\frac{-V}{12R}$
(b) $\frac{V}{12R}$
(c) $\frac{V}{6R}$
(d) $\frac{V}{3T}$

ZOLLEGE.in

2.13 The K-map for a Boolean function is shown in Fig.2.13. The number of essential prime implicants for this function is

(a) 4

(b) 5

(c) 6

(d) 8

| CD \ AB | 00 | 01 | 11 | 10 |
|---|---|---|---|---|
| 00 | 1 | 1 | 0 | 1 |
| 01 | 0 | 0 | 0 | 1 |
| 11 | 1 | 0 | 0 | 0 |
| 10 | 1 | 0 | 0 | 1 |

2.14 For small signal a.c. operation, a practical forward biased diode can be modeled as

(a) a resistance and a capacitance in series

(b) an ideal diode and resistance in parallel

(c) a resistance and an ideal diode in series

(d) a resistance

2.15 The amplitude spectrum of a Gaussian pulse is

(a) uniform (b) a sine function

(c) Gaussian (d) an impulse function

2.16 The ACF of a rectangular pulse of duration T is

(a) a rectangular pulse of duration T

(b) a rectangular pulse of duration 2T

(c) a triangular pulse of duration T

(d) a triangular pulse of duration 2T

2.17 The image channel selectivity of super heterodyne receiver depends upon

(a) IF amplifiers only (b) RF and IF amplifiers only

(c) Preselector, RF and IF amplifiers

(d) Preselector, and RF amplifiers only

2.18 In a PCM system with uniform quantization, increasing the number of bits from 8 to 9 will reduce the quantization noise power by factor of

(a) 9 (b) 8 (c) 4 (d) 2

ZOLLEGE.in

2.19 The Fourier transform of a function x(t) is X(f). The Fourier transform of $\frac{dX(f)}{df}$ will be

(a) $\frac{dX(f)}{df}$ (b) $j2\pi fX(f)$ (c) $jfX(f)$ (d) $\frac{X(f)}{jf}$

2.20 Flat top sampling of low pass signals

(a) gives rise to aperture effect (b) implies over sampling

(c) leads to aliasing (d) introduces delay distortion

2.21 A DSB-SC signal is generated using the carrier $\cos(\omega_c t + \theta)$ and modulating singal x(t). The envelope of the DSB-SC signal is

(a) x(t) (b) $|x(t)|$

(c) only positive portion of x(t) (d) x(t) cosθ

2.22 Quadrature multiplexing is

(a) the same as FDM (b) the same as TDM

(c) a combination of FDM and TDM

(d) quite different from FDM and TDM

2.23 The Fourier transform of a voltage signal x(t) is X(f). The unit of $|X(f)|$ is

(a) volt (b) volt-sec (c) volt/sec (d) volt$^2$

2.24 Compression in PCM refers to relative compression of

(a) higher signal amplitudes (b) lower signal amplitudes

(c) lower signal frequencies (d) higher signal frequencies

2.25 For a given data rate, the bandwidth $B_p$ of a BPSK signal and the bandwidth $B_0$ of the OOK signal are related as

(a) $B_p = \frac{B_0}{4}$ (b) $B_p = \frac{B_0}{2}$ (c) $B_p = B_0$ (d) $B_p = 2B_0$

2.26 The spectral density of a real valued random process has

(a) an even symmetry (b) an odd symmetry

(c) a conjugate symmetry (d) no symmetry

2.27 The probability density function of the envelope of narrow band Gaussion noise is

(a) Poisson (b) Gaussian (c) Rayleigh (d) Rician

ZOLLEGE.in

2.28 The intrinsic impedance of copper at high frequencies is

(a) purely resistive (b) purely inductive

(c) complex with a capacitive component

(d) complex with an inductive component

2.29 The Maxwell equation $V \times H = J\frac{\partial \bar{D}}{\partial t}$ is based on

(a) Ampere's law

(b) Gauss' law

(c) Faraday's law

(d) Coulomb's law

2.30 All transmission line sections shown in Fig.2.30 have characteristic impedance $R_o + j_0$. The input impedance $Z_{in}$ equals

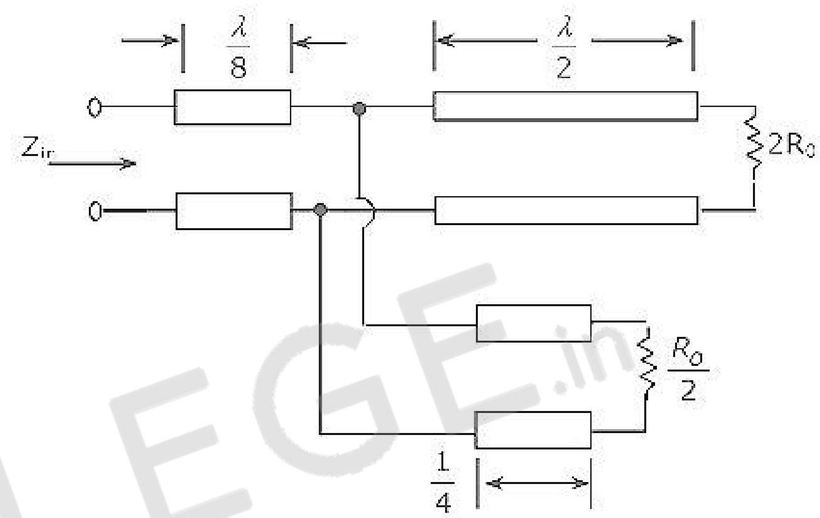


(a) $\frac{2}{3}R_o$ (b) $R_o$

(c) $\frac{3}{2}R_o$ (d) $2R_o$

2.31 The time averages Poynting vector, in W/m$^2$, for a wave with $\bar{E} = 24e^{j(\omega t - \beta z)}\bar{a}_y$ V/m in free space is

(a) $-\frac{2.4}{\pi}\bar{a}_z$ (b) $\frac{2.4}{\pi}\bar{a}_z$ (c) $\frac{4.8}{\pi}\bar{a}_z$ (d) $-\frac{4.8}{\pi}\bar{a}_z$

2.32 The wavelength of a wave with propagation constant $(0.1\pi + j0.2\pi)m^{-1}$ is

(a) $\frac{2}{\sqrt{0.05}}m$ (b) 10 m (c) 20 m (d) 30 m

2.33 The depth of penetration of wave in a lossy dielectric increases with increasing

(a) conductivity (b) permeability (c) wavelength (d) permittivity

2.34 The polarization of wave with electric field vector $\bar{E} = E_0 e^{j(\omega t + \beta z)}\left(\bar{a}_x + \bar{a}_y\right)$ is

(a) linear (b) elliptical

(c) left hand circular (d) right hand circular

ZOLLEGE.in

2.35 The vector H in the far field of an antenna satisfies

(a) $\nabla.\overline{H} = 0$ and $\nabla \times \overline{H} = 0$ (b) $\nabla.\overline{H} \neq 0$ and $\nabla \times \overline{H} \neq 0$

(c) $\nabla.\overline{H} = 0$ and $\nabla \times \overline{H} \neq 0$ (d) $\nabla.\overline{H} \neq 0$ and $\nabla \times \overline{H} = 0$

2.36 The radiation resistance of a circular loop of one turn is 0.01Ω. The radiation resistance of five turns of such a loop will be

(a) 0.002Ω (b) 0.01Ω (c) 0.05Ω (d) 0.25Ω

2.37 An antenna in free space receives 2μW of power when the incident electric field is 20 mV/m rms. The effective aperture of the antenna is

(a) 0.005 $m^2$ (b) 0.05 $m^2$ (c) 1.885 $m^2$ (d) 3.77 $m^2$

2.38 The maximum usable frequency of an ionospheric layer at 60° incidence and with 8 mHz critical frequency is

(a) 16 MHz (b) $\frac{16}{\sqrt{3}}$ MHz (c) 8 MHz

(d) about 6.93 MHz

2.39 A loop is rotating about the y-axis in a magnetic field $\overline{E} = B_0 \cos(\omega t + \phi)\,\overline{a}_x T$. The voltage in the loop is

(a) zero (b) due to rotation only

(c) due to transformer action only

(d) due to both rotation and transformer action

2.40 The far field of an antenna varies with distance r as

(a) $\frac{1}{r}$ (b) $\frac{1}{r^2}$ (c) $\frac{1}{r^3}$ (d) $\frac{1}{\sqrt{r}}$

3. Determine the frequency of resonance and the resonant impedance of the parallel circuit shown in Fig.3. What happens when $L = CR^2$?

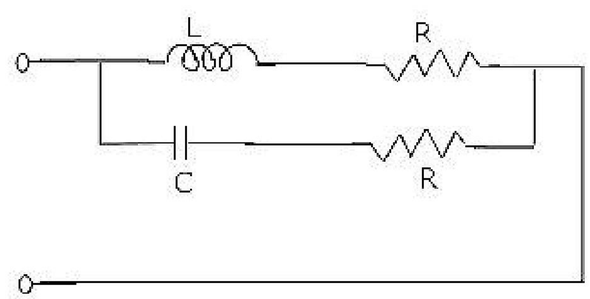


ZOLLEGE.in

4. A voltage source of internal impedance $R_s + jX_s$ supplies power to a load of impedance $R_L + jX_L$ in which only $R_L$ is variable. Determine the value of $R_L$ for maximum power transfer from the source to the load. Also, find the numerical value of $R_L$ if the source impedance is 3.0Ω (purely resistive) and $X_1$ is 4.0Ω.

5. (a) Draw the transfer characteristic of the circuit of Fig.5, assuming both $D_1$ and $D_2$ to be ideal.

   (b) How would the characteristic change if $D_2$ is ideal, but $D_1$ is non-ideal in that it has forward resistance of 10Ω and a reverse resistance of infinity?

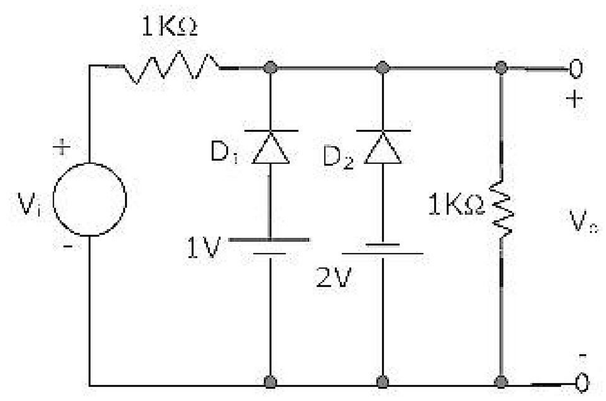


6. Given an irrotational vector field

$$\bar{F} = \left(k_1 xy + k_2 z^3\right)\bar{a}_x + \left(3x^2 - k_3 Z\right)\bar{a}_y + \left(3xz^2 - y\right)\bar{a}_z$$

Find V. $\bar{F}$ at (1,1,-2).

## SECTION B

**(50 Marks)**

Answer any TEN questions. Each question carries 5 marks.

7. The loop transfer function of a single loop control system is given by

$$G(s)H(s) = \frac{100}{s(1+0.01s)} e^{-sT}$$

Using the Nyquist criterion, find the condition for the closed loop system to be stable.

8. The characteristic equation of a feedback control system is

$$s^4 + 20s^3 + 15s^2 + 2s + K = 0$$

   (i) Determine the range of K for the system to be stable.

   (ii) Can the system be marginally stable? If so, find the required value of K and the frequency of sustained oscillation.

ZOLLEGE.in

9. Draw a signal flow graph for the following set of algebraic equations:

$$y_2 = ay_1 - gy_3$$
$$y_3 = ey_2 + cy_4$$
$$y_4 = by_2 - dy_4$$

Hence, find the gains $\frac{y^2}{y^1}$ and $\frac{y_3}{y_1}$

10. Consider the system shown in Fig.10. Determine the value of such that the damping ratio is 0.5. Also obtain the values of the rise time $t_r$ and maximum overshoot $M_p$ in its step response.

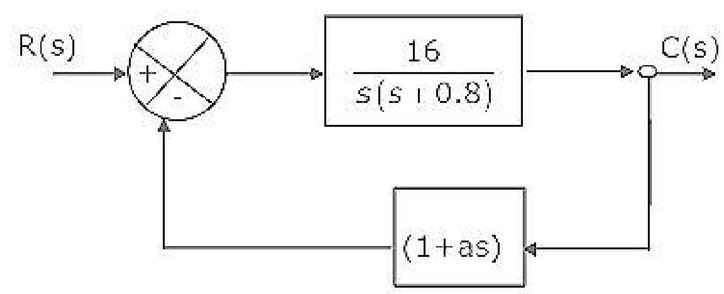


11. Determine the input impedance of the circuit of Fig.11 and investigate if it can be inductive.

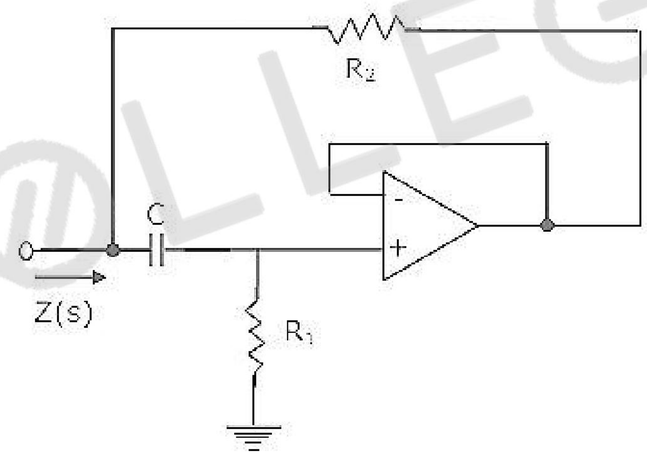


12. Find the value of $R'$ in the circuit of Fig.12 for generating sinusoidal oscillations. Find the frequency of oscillations.

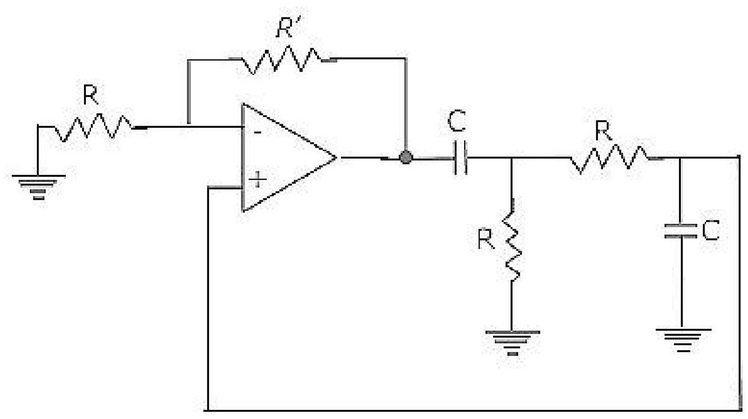


ZOLLEGE.in

13. In the circuit of Fig.13, determine the resistance $R_0$ seen by the output terminals. Ignore the effects of $R_1$ and $R_2$.

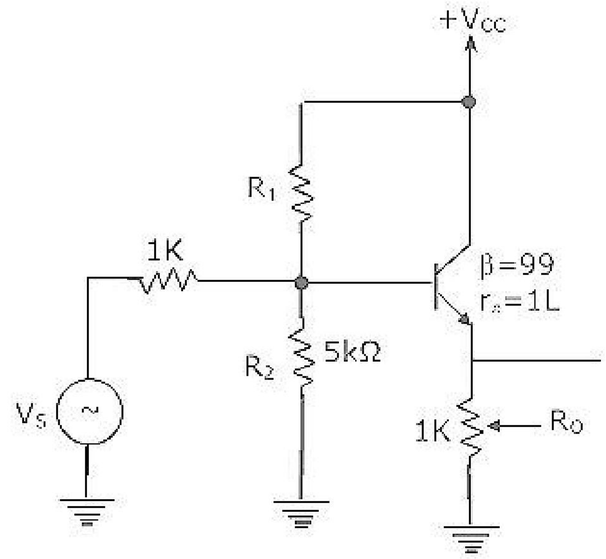


14. The JFET in the circuit of Fig.14 is characterized by the parameters $I_{DSS} = 4MA$ and $V_p = -4V$.

Find (a) $V_0$ if $V_i = 0$, and

(b) $V_i$ if $V_0 = 0$

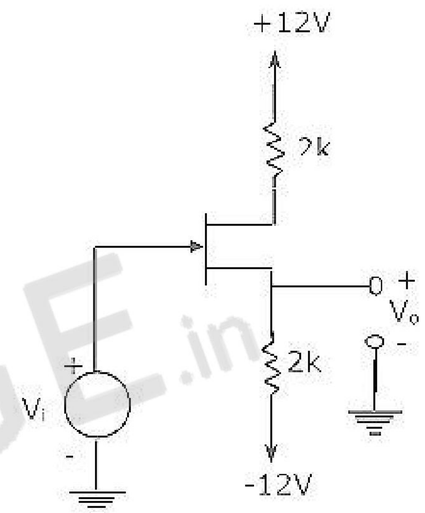


15. The mod-5 counter shown in Fig.15 counts through states $Q_2Q_1Q_0 = 000, 001, 010, 011$ and 100

(a) Will the counter lockout if it happen to be in any one of the unused states?

(b) Find the maximum rate at which the counter will operate satisfactorily.

Assume the propagation delays of flip-flop and AND gate to be $t_F$ and $t_A$ respectively.

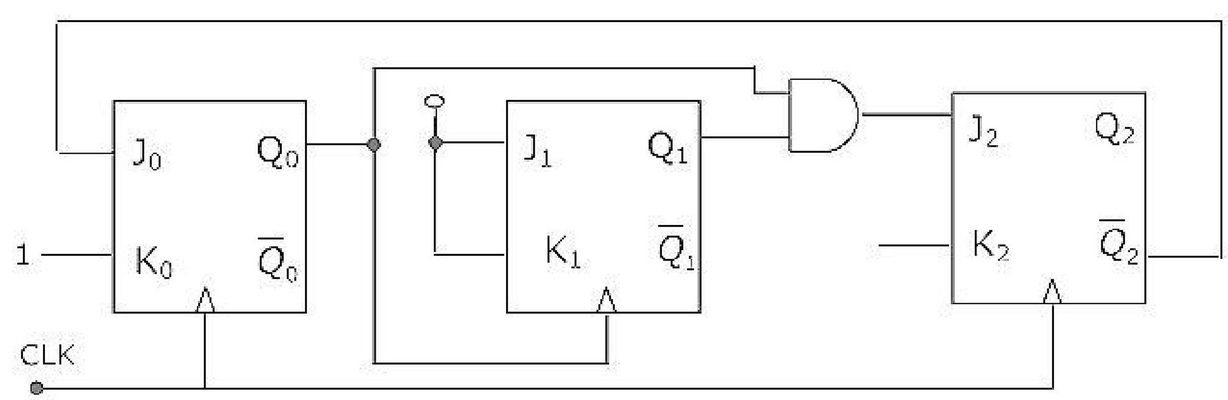


ZOLLEGE.in

16. For the TTL circuit shown in Fig.16, find the current through the collector of transistor $Q_4$ when $V_0 = 0.2V$.

Assume $V_{CE(sat)} = 0.2V$, $\beta = 100$ and $V_{BE(sat)} = 0.7V$. The $\alpha$ of $Q_1$ in its inverse active mode is 0.01.

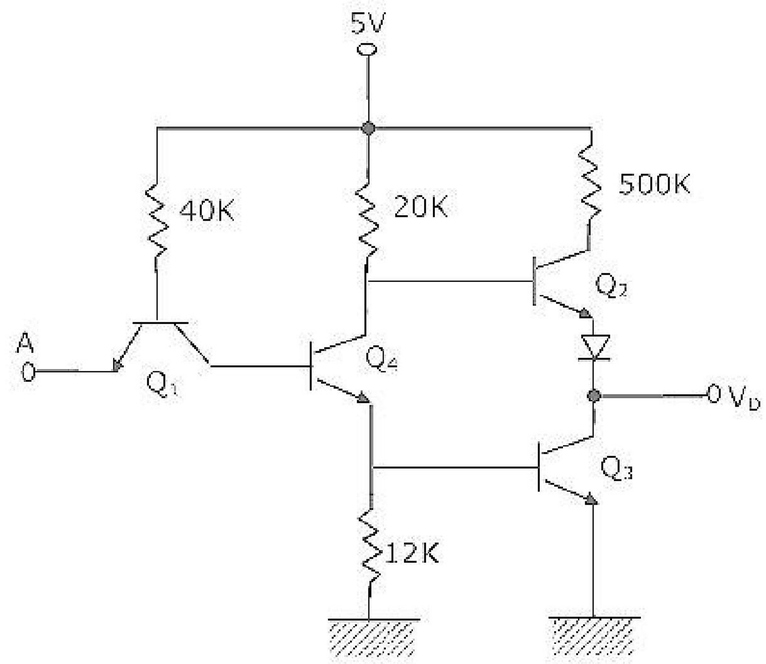


17. Write a short assembly language program, without using any arithmetic instruction, to store hexadecimal 5D in the flag register of 8085 microprocessor. Data in other registers of the processor must not alter upon executing this program.

18. Implement a monostable multivibrator using the timer circuit shown in Fig.18. Also determine an expression for ON time T of the output pulse.

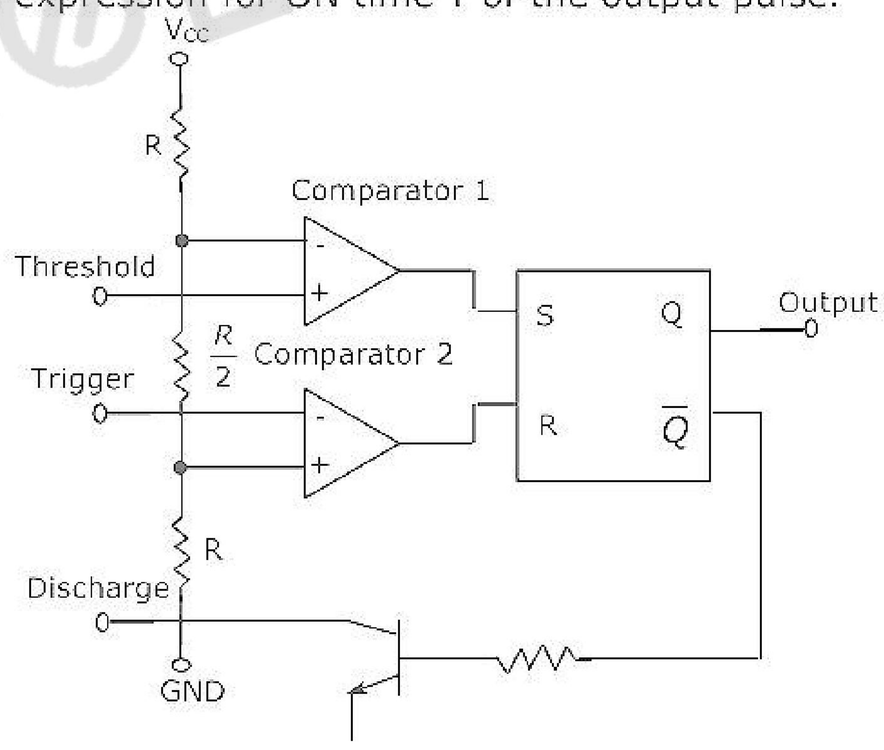


19. The pulse rate in a DM system is 56,000 per sec. The input signal is 5 cos(2π1000t) + 2cos(2π2000t) V, with t in sec. Find the minimum value of step size which will avoid slop overload distortion. What will be the disadvantages of choosing a value of larger than the minimum?

ZOLLEGE.in

20. An SSB signal is demodulated by using a synchronous demodulator. However, the locally arranged carrier has a phase error $\theta$. Determine the effect of the error on demodulation. What will be the effect of this error if the input is DSB-SC in place of SSB?

21. White noise of two-sided spectral density $2 \times 10^{-6}$ $V^2$/Hz is applied to a simple R-C low pass filter whose 3dB cut off frequency is 4 kHz. Find the mean squared value of the noise output.

22. Consider a rectangular pulse g(t) existing between $t = -\frac{T}{2}$ and $t = \frac{T}{2}$. Find and sketch the pulse obtained by convolving g(t) with itself. The Fourier transform of g(t) is a sine function. Write down to Fourier transform of the pulse obtained by the above convolution.

23. A rectangular wave guide with inner dimensions 6 cm $\times$ 3 cm has been designed for a single mode operation. Find the possible frequency range of operations such that the lowest frequency is 5% above the cut off and the highest frequency is 5% below the cut off of the next higher mode.

24. A plane wave with $\bar{E} = 10e^{j(\omega t - \beta z)}\bar{a}_y$ is incident normally on a thick plane conductor lying in the x-y plane. Its conductivity is $6 \times 10^6$ S/m and surface impedance is $5 \times 10^{-4} \angle 45° \Omega$. Determine the propagation constant and the skin depth in the conductor.

25. The electric field vector of a wave is given as

$$\bar{E} = E_0 e^{j(\omega t + 3x - 4y)} \frac{8\bar{a}_x + 6\bar{a}_y + 5\bar{a}_z}{\sqrt{125}} \text{ V/m.}$$

Its frequency is 10 GHz.

(i) Investigate if this wave is a plane wave.

(ii) Determine its propagation constant, and

(iii) Calculate the phase velocity in y-direction.

26. The region between a pair of parallel perfectly conducting planes of infinite extent in the y- and –z directions is partially filled with a dielectric as shown in Fig.26. A 30 GHz $TE_{10}$ wave is incident on the air dielectric interface as shown. Find the VSWR at the interface.

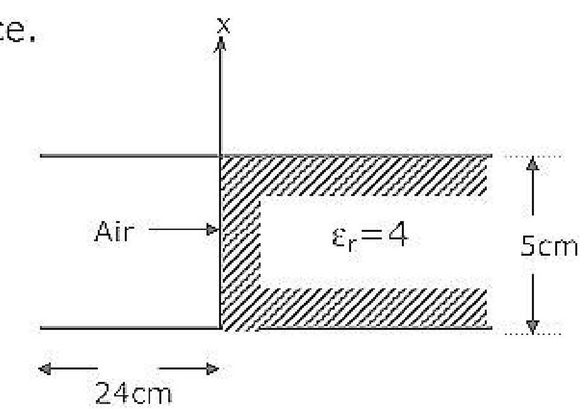


ZOLLEGE.in