SECTION - A

1. This question consists of TWENTY-FIVE sub-questions (1.1 – 1.25) of ONE mark each. For each of these sub-questions, four possible alternatives (A, B, C and D) are given, out of which ONLY ONE is correct. Indicate the correct answer by darkening the appropriate bubble against the question number on the left hand side of the Objective Response Sheet (ORS). You may use the answer book provided for any rough work, if needed.

1.1 Rank of the matrix given below is:

$$\begin{bmatrix} 3 & 2 & -9 \\ -6 & -4 & 18 \\ 12 & 8 & -36 \end{bmatrix}$$

(a) 1 (b) 2 (c) 3 (d) $\sqrt{2}$

1.2 For the function $\phi = ax^2y - y^3$ to represent the velocity potential of an ideal fluid, $\nabla^2\phi$ should be equal to zero. In that case, the value of 'a' has to be:

(a) -1 (b) 1 (c) -3 (d) 3

1.3 If the velocity vector in a two – dimensional flow field is given by $\vec{v} = 2xy\vec{i} + \left(2y^2 - x^2\right)\vec{j}$, the vorticity vector, curl $\vec{v}$ will be

(a) $2y^2\vec{j}$ (b) $6y\vec{k}$ (c) zero (d) $-4x\vec{k}$

1.4 Laplace transform of $(a+bt)^2$ where 'a', and 'b' are constants is given by:

(a) $(a+bs)^2$ (b) $\dfrac{1}{(a+bs)^2}$

(c) $\dfrac{a^2}{s} + \dfrac{2ab}{s^2} + \dfrac{2b^2}{s^3}$ (d) $\dfrac{a^2}{s} + \dfrac{2ab}{s^2} + \dfrac{b^2}{s^3}$

1.5 Following are the values of a fucntion y(x):y(-1)=5,y(0),Y(1)=8, $\dfrac{dy}{dx}$ at x = 0 as per Newton's central difference scheme is:

(a) 0 (b) 1.5 (c) 2.0 (d) 3.0

1.6 Analysis of variance is concerned with:

(a) determining change in a dependent variable per unit change in an independent variable

(b) determining whether a qualitative factor affects the mean of an output variable

ZOLLEGE.in

(c) determining whether significant correlation exists between an output variable and an input variable

(d) determining whether variances in two or more populations are significantly different.

1.7 A concentrated force, F, is applied (perpendicular to the plane of the figure) on the tip of the bent bar shown in Fig.1.7. The equivalent load at a section close the fixed end is:

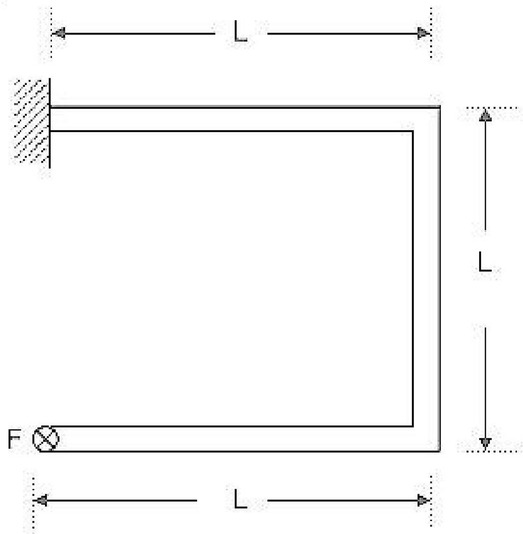

(a) Force F

(b) Force F and bending moment FL

(c) Force F and twisting moment FL

(d) Force F, bending moment F L, and twisting moment FL

1.8 Which theory of failure will you use for aluminium components under steady loading:

(a) Principal stress theory

(b) Principal strain theory

(c) Strain energy theory

(d) Maximum shear stress theory

1.9 For the planar mechanism shown in Fig.1.9, select the most appropriate choice for the motion of link 2 when link 4 is moved upwards.

(a) Link 2 rotates clockwise

(b) Link 2 rotates counter - clockwise

(c) Link 2 does not move

(d) Link 2 motion cannot be determined

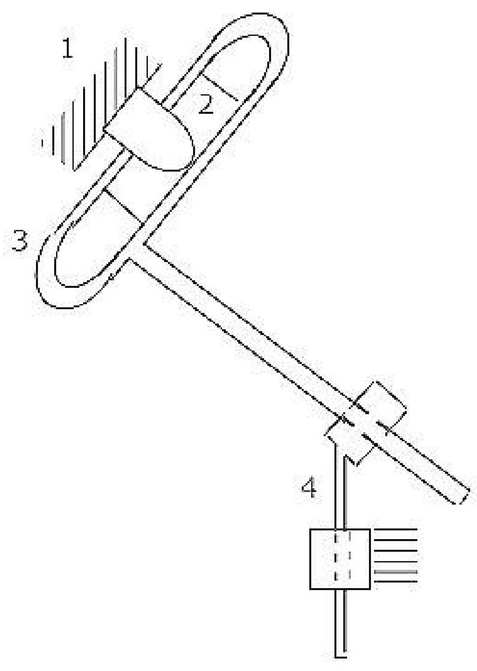

ZOLLEGE.in

1.10 $\frac{\partial^2 u}{\partial t^2} = C^2 \frac{\partial^2 u}{\partial x^2}$ represents the equation for:

(a) Vibration of a stretched string

(b) Motion of a projective in a gravitational field

(c) Heat flow in thin rod

(d) Oscillation of a simple pendulum

1.11 Bolts in the flanged end of pressure vessel are usually pre-tensioned. Indicate which of the following statements in NOT TRUE.

(a) Pre-tensioning helps to seal the pressure vessel

(b) Pre-tensioning increases the fatigue life of the bolts

(c) Pre-tensioning reduces the maximum tensile stress in the bolts

(d) Pre-tensioning helps to reduce the effect of pressure pulsations in the pressure vessel

1.12 If 'p' is the gauge pressure within a spherical droplet, the gauge pressure within a bubble of the same fluid and of same size will be

(a) $\frac{p}{4}$ (b) $\frac{p}{2}$ (c) p (d) $2p$

1.13 If velocity of water inside a smooth tube is doubled, the turbulent flow heat transfer coefficient between the water and the tube will

(a) remain unchanged

(b) increase to double its value

(c) increase but will not reach double its value

(d) increase to more than double its value

1.14 A Stirling cycle and a Carnot cycle operate between 50°C and 350°C. Their efficiencies are η_s and η_c respectively. In this case, which of the following statements is true?

(a) $\eta_s > \eta_c$ (b) $\eta_s = \eta_c$ (c) $\eta_s < \eta_c$

(d) The sign of $(\eta_s - \eta_c)$ depends on the working fluids used

1.15 A Carnot cycle refrigerator operates between 250 K and 300 K. Its coefficient of performance is:

(a) 6.0 (b) 5.0 (c) 1.2 (d) 0.8

ZOLLEGE.in

1.16 In a pulverized-fuel-fired large power boiler, the heat transfer from the burning fuel to the walls of the furnace is

(a) by conduction only
(b) by convection only
(c) by conduction and convection
(d) predominantly by radiation

1.17 A gas turbine power plant has a specific output of 350 kJ/kg and an efficiency of 34%. A regenerator is installed and the efficiency increases to 51%. The specific output will be closest to

(a) 350 kJ/kg
(b) 468 kJ/kg
(c) 525 kJ/kg
(d) 700 kJ/kg

1.18 Kinematic viscosity of air at 20°C is given to be $1.6\times10^{-5} m^2/s$. Its kinematic viscosity at 70°C will be vary approximately

(a) $2.2\times10^{-5} m^2/s$
(b) $1.6\times10^{-5} m^2/s$
(c) $1.2\times10^{-5} m^2/s$
(d) $10^{-5}\times m^2/s$

1.19. Which of the following statements does NOT apply to the volumetric efficiency of a reciprocating air compressor

(a) It decreases with increase in inlet temperature
(b) It increases with decrease in pressure ratio
(c) It increases with decrease in clearance ratio
(d) It decreases with increase in clearance to stroke ratio

1.20. Ambient air dry-bulb temperature is 45°C and wet bulb temperature is 27°C. Select the lowest possible condensing temperature from the following for an evaporatively cooled condenser.

(a) 25°C
(b) 30°C
(c) 42°C
(d) 48°C

1.21. Identify the stress –state in the FLANGE portion of a PARTIALLY DRAWN CYLINDRICAL CUP when deep – drawing without a blank holder

(a) Tensile in all three directions
(b) No stress in the flange at all, because there is no blank - holder
(c) Tensile stress in one direction and compressive in the other direction
(d) Compressive in two directions and tensile in the third direction

1.22. Which of the following materials requires the largest shrinkage allowance, while making a pattern for casting?

(a) Aluminium
(b) Brass
(c) Cast Iron
(d) Plain Carbon Steel

ZOLLEGE.in

1.23. In Electro-Discharge Machining (EDM), the tool is made of:

(a) Copper (b) High Speed Steel

(c) Cast Iron (d) Plain Carbon Steel

1.24. Choose the correct statement:

(a) A fixture is used to guide the tool as well as to locate and clamp the work piece

(b) A jig is used to guide the tool as well as to locate and clamp the work piece

(c) Jigs are used on CNC machines to locate and clamp the work piece and also to guide the tool

(d) No arrangements to guide the tool is provided in a jig

1.25 The first algorithm for Linear Programming was given by:

(a) Bellman (b) Dantzing

(c) Kulm (d) von Neumann

2. This question consists of TWENTY-FIVE sub-questions (2.1 – 2.25) of TWO marks each. For each of these sub-questions, four possible alternatives (A, B, C and D) are given, out of which ONLY ONE is correct. Indicate the correct answer by darkening the appropriate bubble against the question number on the left hand side of the Objective Response Sheet (ORS). You may use the answer book provided for any rough work, if needed.

2.1 The eigen values of the matrix

$\begin{bmatrix} 5 & 3 \\ 3 & -3 \end{bmatrix}$ are:

(a) 6 (b) 5 (c) -3 (d) -4

2.2. The static moment of the area of a half circle of unit radius about y-axis (see Fig.2.2) $\int_0^{x=1} 2xydx$ is equal to

(a) $\frac{2}{3}$ (b) $\frac{\pi}{8}$

(c) $\frac{\pi}{2}$ (d) $\frac{\pi}{4}$

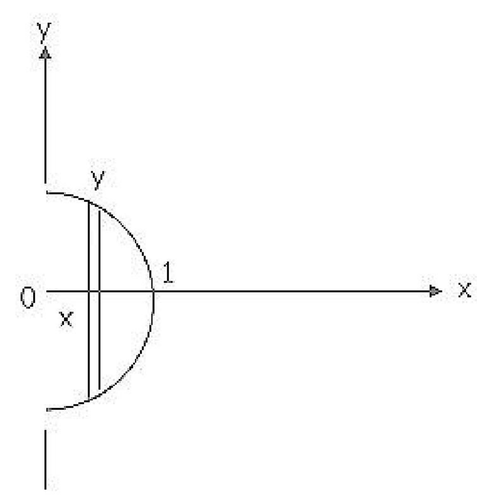

ZOLLEGE.in

2.3. In a flow field in x, y – plane, the variation of velocity with time t is given by $v = \left(x^2 + yt\right)\bar{i}$

$$\bar{v} = \left(x^2 + y^2\right)\bar{i}$$

The acceleration of the particle in this field, occupying point (1,1) at time t = 1 will be

(a) $\bar{i}$ (b) $2\bar{i}$ (c) $3\bar{i}$ (d) $5\bar{i}$

2.4. $\frac{d^2y}{dx^2} + \left(x^2 + 4x\right)\frac{dy}{dx} + y = x^8 - 8$.

The above equation is a

(a) partial differential equation

(b) nonlinear differential equation

(c) non-homogeneous differential equation

(d) ordinary differential equation

2.5. We wish to solve $x^2 - 2 = 0$ by Newton Raphson technique. Let the initial guess $bx_0 = 1.0$ subsequent estimate of x (i.e. x_1) will be:

(a) 1.414 (b) 1.5 (c) 2.0

(d) None of the above

2.6. Four arbitrary points $(x_1, y_1), (x_2, y_2), (x_3, y_3), (x_4, y_4)$ are given in the x,y – plane. Using the method of least squares, if, regressing y upon x gives the fitted line y = ax + b; and regressing y upon x gives the fitted line y = ax + b; and regressing x upon y gives the fitted line x = cy + d, then

(a) the two fitted lines must coincide

(b) the two fitted lines need not coincide

(c) it is possible that ac = 0

(d) a must be $\frac{1}{c}$

2.7. A thin walled cylindrical vessel of wall thickness *t* and diameter *d* is filled with gas to a gauge pressure of *p*. the maximum shear stress on the vessel wall will then be

(a) $\frac{pd}{t}$ (b) $\frac{pd}{2t}$ (c) $\frac{pd}{4t}$ (d) $\frac{pd}{8t}$

ZOLLEGE.in

2.8. A lean elastic beam of given flexural rigidity, EI, is loaded by a single force F as shown in Fig.2.8. How many boundary conditions are necessary to determine the deflected centerline of the beam?

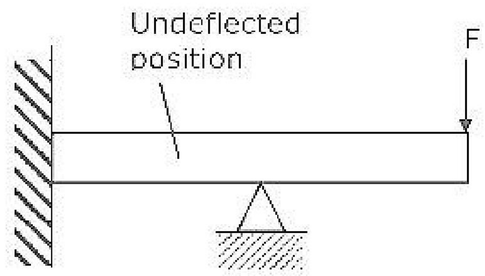

(a) 5 (b) 4 (c) 3 (d) 2

2.9. A shown in Fig.2.9, a person A is standing at he centre of a rotating platform facing person B who is riding a bicycle, heading East. The relevant speeds and distances are shown in Fig.2.9 a person a bicycle, heading East. At the instant under consideration, what is the apparent velocity of B as seen by A?

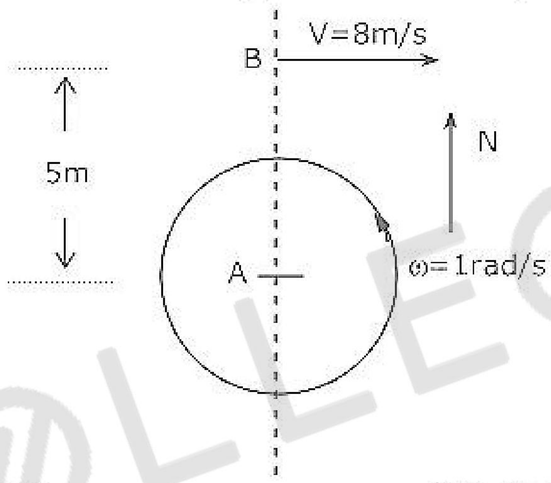

(a) 3 m/s heading East (b) 3 m/s heading West
(c) 8 m/s heading East (d) 13 m/s heading East

2.10. For the audio cassette mechanism shown in Fig.2.10, where is the instantaneous centre of rotation (point) of the two spools?

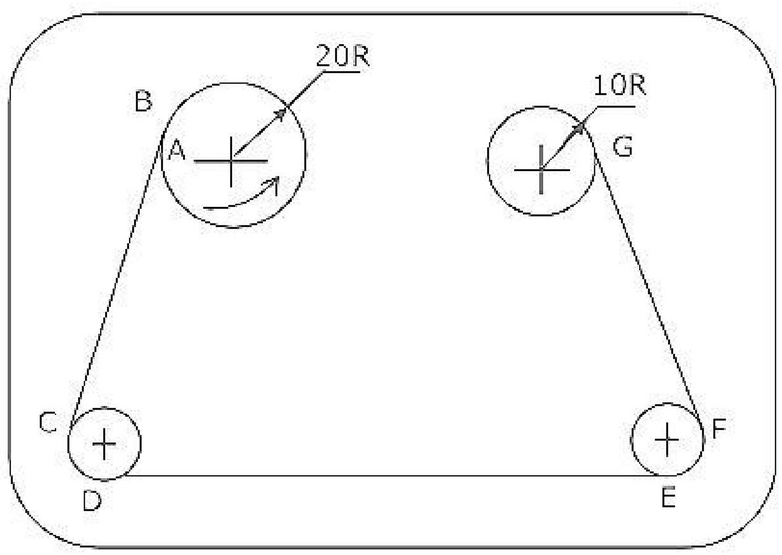

ZOLLEGE.in

(a) Point P lies to the left of both the spools but a infinity along the line joining A and H

(b) Point P lies in between the two spools on the line joining A and H, such that $\overline{PH} = 2\overline{AP}$

(c) Point P lies to the right of both the spools on the line joining A and H, such that $\overline{AH} = \overline{HP}$

(d) Point P lies at the intersection of the line joining B and C and the line joining G and F

2.11. With regard to belt drives with given pulley diameters, centre distance and coefficient of friction between the pulley and the belt materials, which of the statements below are FALSE?

(a) A crossed flat belt configuration can transmit more power than an open flat belt configuration

(b) A 'V' belt has greater power transmission capacity than an open belt

(c) Power transmission is greater when belt tension is higher due to centrifugal effects than the same belt drive when centrifugal affects are absent

(d) Power transmission is the greatest just before the point of slipping is reached

2.12. Under repeated loading a material has the stress-strain curve shown in Fig.2.12. Which of the following statements is true?

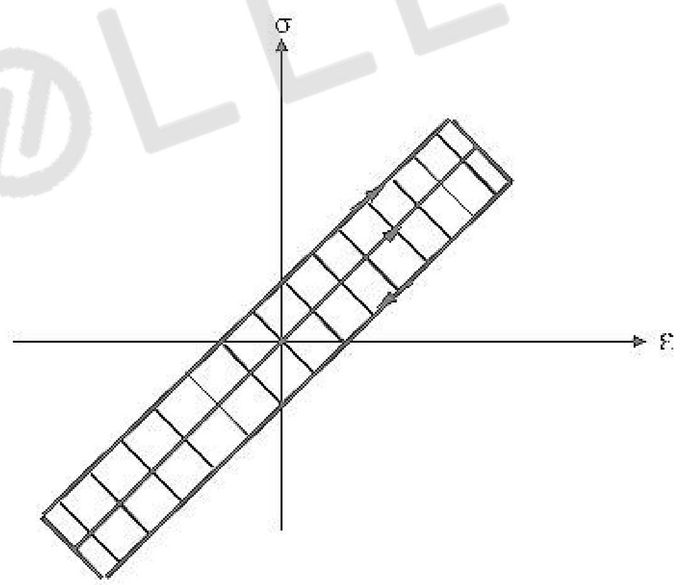

(a) The smaller the shaded area, the better the material damping

(b) The larger the shaded area, the better the material damping

(c) Material damping is an independent material property and does not depend on this curve

(d) None of the above

ZOLLEGE.in

2.13. Consider the system of two wagons shown in Fig.2.13. The natural frequencies of this system are

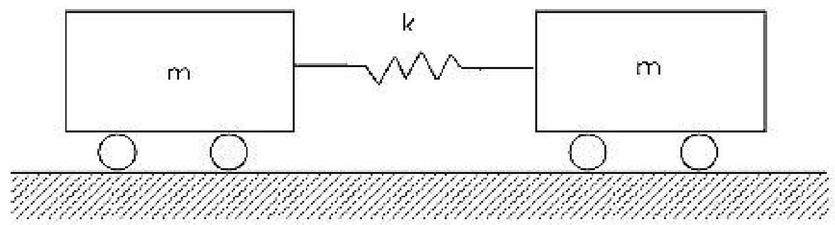

(a) $0, \frac{\sqrt{2k}}{m}$ (b) $\frac{\sqrt{k}}{m}, \frac{\sqrt{2k}}{m}$ (c) $\frac{\sqrt{k}}{m}, \frac{\sqrt{k}}{2m}$ (d) $0, \frac{\sqrt{k}}{2m}$

2.14. Water flows through a vertical contraction from a pipe of diameter d to another of diameter $\frac{d}{2}$ (see Fig.2.14). The flow velocity at the inlet to the contraction is 2m/s and pressure 200 kN/m^2. If the height of the contraction measures 2m, the pressure at the exit of the contraction will be very nearly

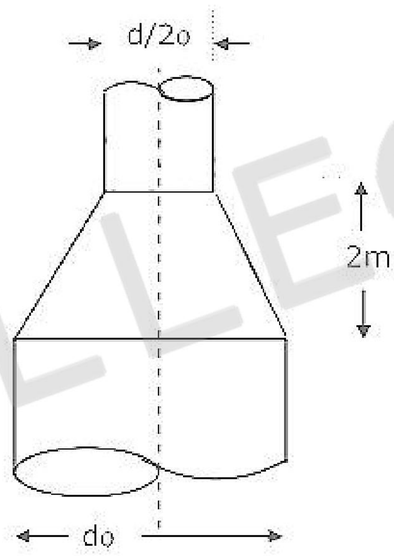

(a) 168 kN/m^2 (b) 192 kN/m^2
(c) 150 kN/m^2 (d) 174 kN/m^2

2.15. An aero plane is cruising at a speed of 800 kmph at an altitude, where the air temperature is 0°C. The flight Mach number at this speed is nearly

(a) 1.5 (b) 0.254 (c) 0.67 (d) 2.04

2.16. It is proposed to coat a 1 mm diameter wire with enamel paint (k = 0.1 W/mK) to increase heat transfer with air. If the air side heat transfer coefficient is 100 W/m^2 K, the optimum thickness of enamel paint should be

(a) 0.25 mm (b) 0.5 mm (c) 1 mm (d) 2 mm

ZOLLEGE.in

2.17. An isolated thermodynamic system executes a process. Choose the correct statement (s) from the following:

(a) No heat is transferred

(b) No work is done

(c) No mass flows across the boundary of the system

(d) No chemical reaction takes place within the system

2.18. The silencer of an internal combustion engine

(a) reduces noise

(b) decreases brake specific fuel consumption (BSFC)

(c) increases BSFC

(d) has no effect on its efficiency

2.19. Select statements from List II matching the processes in List I. Enter your answer as D, C if the correct choice for (1) is (D) and that for (2) is (C)

List I	List II
(1) Cooling and dehumidification	(A) Dry bulb temperature increases, but, dew – point temperature decreases
(2) Chemical dehumidification	(B) Dew – point temperature increases and dry – bulb temperature remains unchanged
	(C) Dry – bulb and wet – bulb temperature decrease
	(D) dry – bulb temperature decreases, but, dew – point temperature increases

2.20. Select statements from List II matching the processes in List I. Enter your answer as A, B if the correct choice for (1) is (A) and that for (2) is (B)

List I	List II
(1) Intercooling	(A) No heat transfer during compression
(2) Isothermal compression	(B) Reduces low pressure compressor work
	(C) Heat rejection during compression
	(D) Reduces high pressure compressor work

ZOLLEGE.in

2.21. For butt – welding 40 mm thick steel plates, when the expected quantity of such jobs is 5000 per month over a period of 10 years, choose the best suitable welding process out of the following available alternatives.

(a) Submerged arc welding

(b) Oxy – acetylene gas welding

(c) Electron beam welding

(d) MIG welding

2.22. What is approximate percentage change is the life, t, of a tool with zero rake angle used in orthogonal cutting when its clearance angle, α, is changed from 10° to 7°? (Hint: Flank wear rate is proportional to cot α)

(a) 30% increase (b) 30% decrease

(c) 70% increase (d) 70% decrease

2.23. Suppose X is a normal random variable with mean 0 and variance 4. Then the mean of the absolute value of X is

(a) $\frac{1}{\sqrt{2\pi}}$ (b) $\frac{2\sqrt{2}}{\sqrt{\pi}}$ (c) $\frac{2\sqrt{2}}{\pi}$ (d) $\frac{2}{\sqrt{\pi}}$

2.24. In computing Wilson's economic lot size for an item, by mistake the demand rate estimate used was 40% higher than the tree demand rate. Due to this error in the lot size computation, the total cost of setups plus inventory holding per unit time, would rise above the true optimum by approximately

(a) 1.4% (b) 6.3% (c) 18.3% (d) 8.7%

2.25. At a production machine, parts arrive according to a Poisson process at the rate of 0.35 parts per minute. Processing time for parts have exponential distribution with mean of 2 minutes. What is the probability that a random part arrival finds that there are already 8 parts in the system (in machine + in queue)?

(a) 0.0247 (b) 0.0576 (c) 0.0173 (d) 0.082

ZOLLEGE.in

SECTION – B

This section consists of TWENTY questions of FIVE marks each. Attempt ANY FIFTEEN questions. Answers must be given in the answer book provided. Answer for each question must start on a fresh page and must appear at one place only. (Answers to all parts of a question must appear together).

3. Consider the sign board mounting shown in Fig.3. The wind load acting perpendicular to the plane of the figure is F = 100N. We wish to limit the deflection, due to bending, at point A of the hollow cylindrical pole of outer diameter 150 mm, to 5 mm. Find the wall thickness for the pole. Assume $E = 2.0 \times 10^{11} N/m^2$.

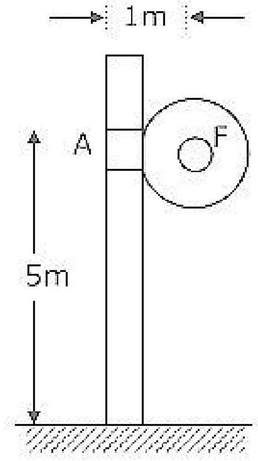

4. The peak bending stress at critical section of a component varies between 100 MN/m^2 and 300 MN/m^2. The ultimate tensile strength of the material is 700 MN/m^2, yield point in tension is 500 MN/m^2, and endurance limit for reversed bending is 350 MN/m^2. Find the factor of safety.

5. A proper base isolation is to be designed for mounting a sensitive instrument as shown in Fig.5. at the point of mounting, the base vibration due to other disturbances is indicated in the figure. If the permitted absolute displacement amplitude on the rigid mounting pad is 0.001 mm, find the stiffness of the spring. Assume that the total mass of the mounting pad and the instrument is 50 kg.

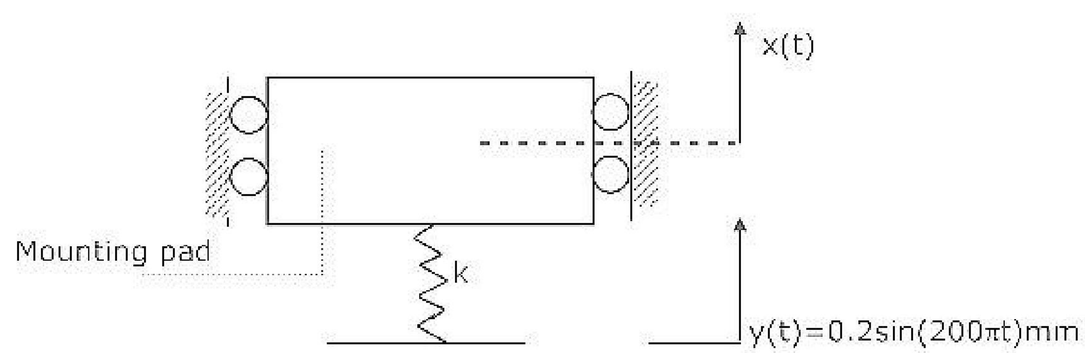

Fig.5

ZOLLEGE.in

6. Figure 6 shows a 2-degree of freedom manipulator consisting of a rotary base and a sliding arm, which slides radially with respect to the base. The instantaneous position, angular velocity, angular acceleration and relative velocity of arm with respect to the base are shown in Fig.6. The radial relative acceleration of the arm with respect to the base is zero. Obtain the magnitude and direction of the absolute acceleration of the point P on the sliding arm.

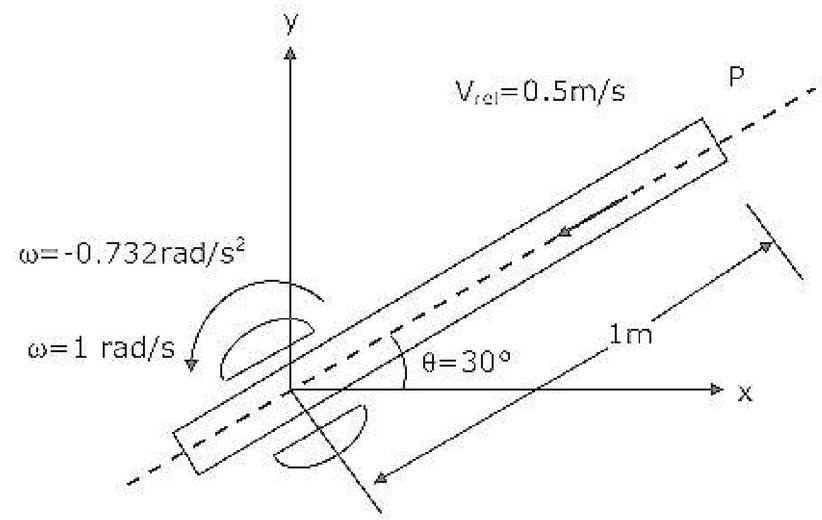

7. A planetary gear train is shown in Fig.7. Internal gear (1) has 104 teeth and is held fixed and planet gear (2) has 96 teeth. How much does the planet gear rotate for sixty revolutions of the planet carrier (3) in clockwise direction?

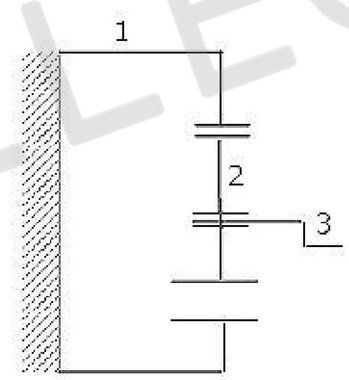

8. A flat belt open drive transmits 1.5 kW of power. The coefficient of friction between the belt and the drive pulley is 0.25 and the lap angle is 159°. The drive pulley is rotating in the clockwise direction with the linear belt velocity of 3.75 m/s. Determine the x and y components of the reaction force on the drive pulley shaft.

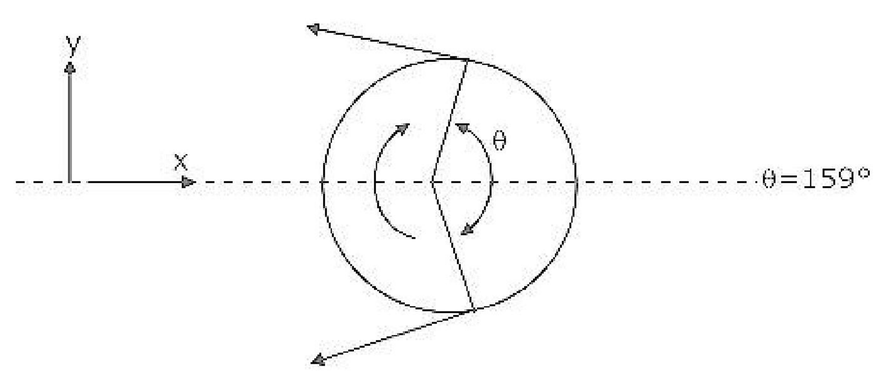

ZOLLEGE.in

9. A centrifugal pump running at 750 rpm discharges water at $0.1 m^3/s$ against a head of 10 m at its best efficiency. A second pump of the same homologous series, when working at 500 rpm, is to deliver water at $0.05 m^3/s$ at its best efficiency. What will be the design head of the second pump and what is the scale ratio between the first and the second?

10. Two fluids, A and B exchange heat in a counter-current heat exchanger. Fluid A enters at 420°C has a mass flow rate of 1 kg/s. Fluid B enters a 20°C and also has a mass flow rate of 1 kg/s Effectiveness of heat exchanger is 75%. Determine the heat transfer rate and exit temperature of fluid B. (Specific heat Fluid A is 1 kJ/kgK and that of Fluid B is 4 kJ/kgK).

11. An R-717 (ammonia) system operates on the basic vapour compression refrigeration cycle. The evaporator and the condenser pressures are 0.119 MPa and 1.389 MPa respectively. The mass flow rate of refrigerant is 0.1 kg/s. If the volumetric efficiency of the compressor is 84%, determine the compressor displacement rate. If the COP of the cycle is 2, determine the power input to the compressor.

Saturation properties of R-717 (ammonia)

Temperature °C	Pressure MPa	Specific Volume of Vapour, m^3/kg	Enthalpy kJ/kg	
			Liquid	Vapour
-30	0.119	0.9638	63.9	1423.6
36	1.389	0.0930	371.4	1488.6

12. A large diesel engine runs on a stroke cycle at 2000 rpm. The engine has a displacement of 25 litre and a brake mean effective pressure of $0.6 MN/m^2$. It consumes 0.018 kg/s of fuel (calorific value = 42000 kJ/kg). Determine the brake power and the brake thermal efficiency.

13. An isentropic air turbine is used to supply 01. kg/s of air at $0.1 MN/m^2$ and at 285 K to a cabin. The pressure at inlet to the turbine is $0.4 MN/m^2$. Determine the temperature at turbine inlet and the power developed by the turbine. Assume $C_p = 1.0 kJ/kgK$.

14. An adiabatic steam turbine receives dry saturated steam at $1.0 MN/m^2$ and discharges it at $0.1 MN/m^2$. The steam flow rate is 3 kg/s and the moisture at exit in negligible. If the ambient temperature is 300 K, determine the rate of entropy production and the lost power.

Steam properties:

P MN/m^2	T_{sat} °C	h_f kJ/kg	h_g kJ/kg	s_f kJ/kgK	s_g kJ/kgK
1.0	179.9	762.8	2778.1	2.139	6.586
0.1	99.6	417.5	2675.5	1.303	7.359

ZOLLEGE.in

15. In a butt – welding operation on plates, the heat input necessary is given by

$$Q = 8KT_c t\left[0.2 + \frac{vb}{4\alpha}\right]$$

where

K is thermal conductivity

T_c is temperature increase from room temperature up to melting point.

t is thickness of plate

v is welding speed

b is width of the weld and

α is thermal diffusivity

Two alloy steel plates as shown in Fig.15 are to be welded using a power source rated at 5 kVA having a duty cycle of 75%. Using the given data, determine the MAXIMUM welding speed for the job given in fig.15.

Data: K = 45W/m°C, T_c = 145°C, and $\alpha = 1.2 \times 10^{-5}$ m^2/s

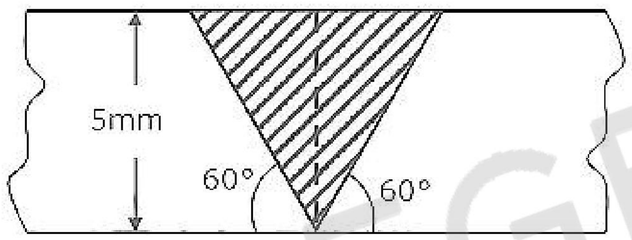

16. In a particular mould design, the down sprue has an area of cross section of 6.45cm^2 where the pouring basin leads into the sprue. The sprue is 20 cm long. The required metal flow rate at the top section of the sprue is 820 cm^3/s. determine the pouring height necessary above the sprue top. Also determine the area of cross-section of the sprue at its bottom to avoid aspiration of liquid metal.

17. The shape ABCDE shown in Fig.17 is to be produced by blanking operation from a largest sheet of 4 mm thickness. The material is alloy steel having ultimate shear strength, USS of 600 MPa.

(a) Calculate the force required in the blanking operation.

(b) Determine the coordinates of the "centre of pressure" during the operation with origin at A.

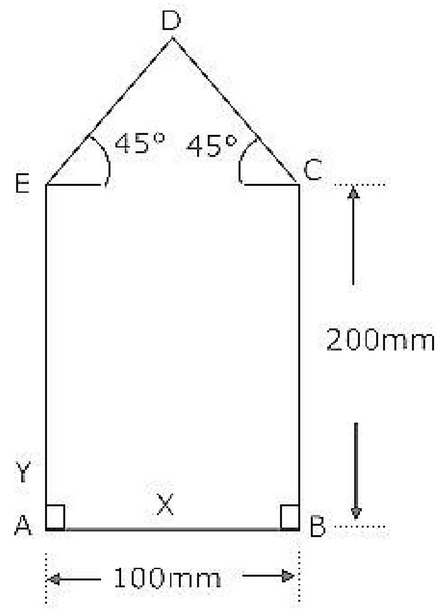

ZOLLEGE.in

18. A_1 is the diameter of a random part of type A and A_1 has Uniform distribution over the tolerance range, (25.0, 25.3) mm. Similarly, B_1 is the diameter of a random part of type B and B_1 has Uniform distribution over the tolerance range, (25.4, 25.6) mm. Satisfactory assembly of type A part with a type B part requires that the clearance ($B_1 - A_1$) must be between 0.1 mm and 0.4 mm.

(i) List the corner points of the region in the X – Y plane where (A_1, B_1) would lie in the event of satisfactory assembly between A_1 and B_1.

(ii) Derive the probability that A_1 and B_1 do NOT give satisfactory assembly.

19. Demands for parts in weeks 1, 2, 3 are : 200, 300, 500 units respectively while available capacities for production in the three weeks are for: 350, 350, 350 units respectively. Inventory holding cost is Rs.h per week.

(i) To minimize total Inventory holding cost while meeting demands on time, determine the production quantities in weeks 1, 2, 3.

(ii) If the optimization problem above is formulated as a Linear Program, determine the Shadow Price of the capacity constraint in the THIRD week.

20. In an orthogonal cutting experiment with a tool of rake angle $\gamma=7°$, the chip thickness was found to be 2.5 mm when the uncut chip thickness was set to 1 mm.

(a) Find the shear angle ϕ

(b) Find the friction angle β assuming that Merchant's formula holds good.

21. The lives of two tools, A and B, governed by the equations $vt^{0.125} = 2.5$ and $vt^{0.250} = 7$ respectively in certain machining operation where y is the cutting speed in m/s and t is the tool life in seconds.

(a) Find out the speed v* at which both the tools will have the same life. Also calculate the corresponding tool life t*.

(b) If you have to machine at a cutting speed of 1 m/s, which one of these tools will you choose in order to have less frequent tool changes?

22. The bore diameter, D, of a plain ring having a height of 35 mm was measured using two spherical balls, each of diameter d = 25.000 mm. The ring was placed on a surface table and then both the balls were placed inside the ring. In this position, the height, h, of the top of the upper ball from the surface table was found to be 42.000 mm.

(a) Derive the expression for D in terms of d and h.

(b) What is the bore diameter, D, of the ring?

ZOLLEGE.in