Q.1 - Q.30 Carry One Mark Each

1. $\underset{x \to 0}{Lt} \frac{\sin^2 x}{x}$ is equal to

(a) 0 (b) ∞ (c) 1 (d) -1

2. The accuracy of Simpson's rule quadrature for a step size h is

(a) $O(h^2)$ (b) $O(h^3)$ (c) $O(h^4)$ (d) $O(h^5)$

3. For the matrix $\begin{bmatrix} 4 & 1 \\ 1 & 4 \end{bmatrix}$ the eigen vaues are

(a) 3 and -3 (b) -3 and -5 (c) 3 and 5 (d) 5 and 0

4. The second moment of a circular area about the diameter is given by (D is the diameter).

(a) $\frac{\pi D^4}{4}$ (b) $\frac{\pi D^4}{16}$ (c) $\frac{\pi D^4}{32}$ (d) $\frac{\pi D^4}{64}$

5. A concentrated load of P acts on a simply supported beam of span L at a distance $\frac{L}{3}$ from the left support. The bending moment at the point of application of the load is given by

(a) $\frac{PL}{3}$ (b) $\frac{2PL}{3}$ (c) $\frac{PL}{9}$ (d) $\frac{2PL}{9}$

6. Two identical circular rods of same diameter and same length are subjected to same magnitude of axial tensile force. One of the rods is made out of mild steel having the modulus of elasticity of 206 Gpa. The other rod is made out of cast iron having he modulus of elasticity of 100 Gpa. Assume both the materials to be homogeneous and isotropic and the axial force causes the same amount of uniform stress in both the rods. The stresses developed are within the proportional limit of the respective materials. Which of the following observations is correct?

(a) Both rods elongate by the same amount

(b) Mild steel rod elongates more than the cast iron rod

(c) Cast iron rod elongates more than the mild steel rod

(d) As the stresses are equal strains are also equal in both the rods

ZOLLEGE.in

7. Two beams, one having square cross section and another circular cross-section, are subjected to the same amount of bending moment. If the cross sectional area as well as the material of both the beams are the same then

(a) maximum bending stress developed in both the beams is the same

(b) the circular beam experiences more bending stress that the square one

(c) the square beam experiences more bending stress than the circular one

(d) as the material is same both the beams will experience same deformation

8. The mechanism used in a shaping machine is

(a) a closed 4-bar chain having 4 revolute pairs

(b) a closed 6-bar chain having 6 revolute pairs

(c) a closed 4-bar chain having 2 revolute and 2 sliding pairs

(d) an inversion of the single slider-crank chain

9. The lengths of the links of a 4-bar linkage with revolute pairs only are p,q,r and s units. Given that $p < q < r < s$. which of these links should be the fixed one, for obtaining a 'double crank' mechanism?

(a) link of length p

(b) link of length q

(c) link of length r

(d) link of length s

10. Consider the arrangement shown in the figure below where J is the combined polar mass moment of inertia of the disc and the shafts. K_1, K_2, K_3 are the torsional stiffness of the respective shafts. The natural frequency of torsional oscillation of the disc is given by

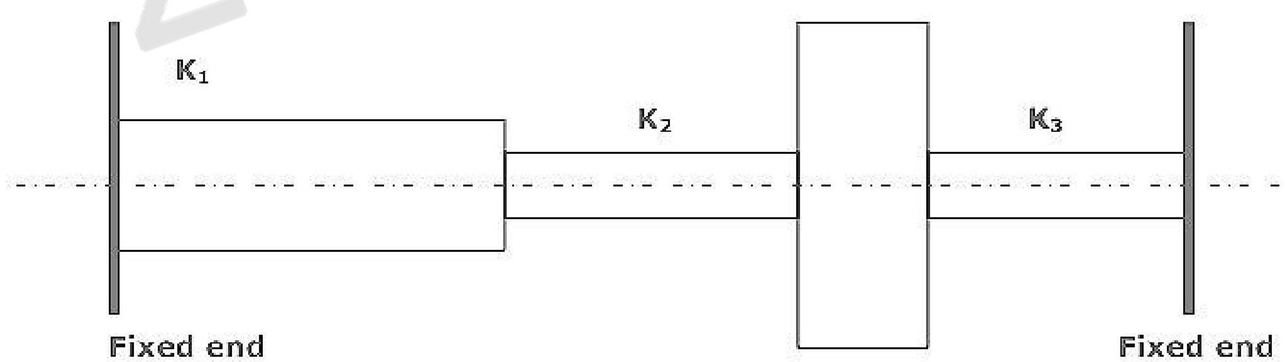

(a) $\sqrt{\dfrac{K_1 + K_2 + K_3}{J}}$

(b) $\sqrt{\dfrac{K_1K_2 + K_2K_3 + K_3K_1}{J(K_1 + K_2)}}$

(c) $\sqrt{\dfrac{K_1K_2K_3}{J(K_1K_2 + K_2K_3 + K_3K_1)}}$

(d) $\sqrt{\dfrac{K_1K_2 + K_2K_3 + K_3K_1}{J(K_2 + K_3)}}$

ZOLLEGE.in

11. Maximum shear stress developed on the surface of a solid circular shaft under pure torsion is 240 MPa. If the shaft diameter is doubled then the maximum shear stress developed corresponding to the same torque will be

(a) 120 MPa (b) 60 MPa (c) 30 MPa (d) 15 MPa

12. A wire rope is designated as 6 × 19 standard hoisting. The numbers 6 × 9 represent

(a) diameter in millimeter × length in meter

(b) diameter in centimeter × length in meter

(c) number of strands × number of wires in each strand

(d) number of wires in each strand × number of strands

13. A cylindrical body of cross-sectional area A, height H and density ρ_s, is immersed to a depth h in a liquid of density ρ, and tied to the bottom with a string. The tension in the string is

(a) ρghA (b) $(\rho_s - \rho)ghA$ (c) $(\rho - \rho_s)ghA$ (d) $(\rho h - \rho_s H)gA$

14. A 2 kW, 40 litre water heater is switched on for 20 minutes. The heat capacity C_p for water is 4.2 kJ/kg K. Assuming all the electrical energy has gone into heating the water, increase of the water temperature in degree centigrade is

(a) 2.7 (b) 4.0 (c) 14.3 (d) 25.25

15. An industrial heat pump operates between the temperatures of 27°C and −13°C. The rates of heat addition and heat rejection are 750 W and 1000W, respectively. The COP for the heat pump is

(a) 7.5 (b) 6.5 (c) 4.0 (d) 3.0

16. A plate having 10 cm^2 area each side is hanging in the middle of a room of 100 m^2 total surface area. The plate temperature and emissivity are respectively 800 K and 0.6. the temperature and emissivity values for the surfaces of the room are 300K and 0.3 respectively. Boltzmann's constant $\sigma=5.67\times10^{-8}$ W/m^2K^4. The total heat loss from the two surfaces of the plate is

(a) 13.66 W (b) 27.32 W (c) 27.87 W (d) 13.66 W

17. For air with a relative humidity of 80%

(a) the dry bulb temperature is less than the wet bulb temperature

(b) the dew point temperature is less than wet bulb temperature

(c) the dew point and wet bulb temperatures are equal

(d) the dry bulb and dew point temperatures are equal

ZOLLEGE.in

18. For a spark ignition engine, the equivalence ratio (ϕ) of mixture entering the combustion chamber has values.

(a) $\phi < 1$ for idling and $\phi > 1$ for peak power conditions.

(b) $\phi > 1$ for both idling and peak power conditions.

(c) $\phi > 1$ for idling and $\phi < 1$ for peak power conditions.

(d) $\phi < 1$ for both idling and peak power conditions.

19. A diesel engine is usually more efficient than a spark ignition engine because

(a) diesel being a heavier hydrocarbon, releases more heat per kg than gasoline

(b) the air standard efficiency of diesel cycle is higher than the Otto cycle, at a fixed compression ratio

(c) the compression ratio of a diesel engine is higher than that of an SI engine

(d) self ignition temperature of diesel is higher than that of gasoline

20. In a Rankine cycle, regeneration results in higher efficiency because

(a) pressure inside the boiler increases

(b) heat is added before steam enters the low pressure turbine

(c) average temperature of heat addition in the boiler increases

(d) total work delivered by the turbine increases

21. Considering the variation of static pressure and absolute velocity in an impulse stream turbine, across one row of moving blades

(a) both pressure and velocity decrease

(b) pressure decreases but velocity increases

(c) pressure remains constant, while velocity increases

(d) pressure remains constant, while velocity decreases

22. During heat treatment of steel, the hardness of various structures in increasing order is

(a) martensite, fine pearlite, coarse pearlite, spherodite

(b) fine pearlite, coarse pearlite, spherodite, martensite

(c) martensite, coarse pearlite, fine pearlite, spherodite

(d) spherodite, coarse pearlite, fine pearlite, martensite

23. Hardness of green sand mould increases with

(a) increase in moisture content beyond 6 percent

(b) increase in permeability

(c) decrease in permeability

(d) increase in both moisture content and permeability

ZOLLEGE.in

24. In Oxyacetylene gas welding, temperature at the inner cone of the flame is around

(a) 3500°C (b) 3200°C (c) 2900°C (d) 2550°C

25. Cold working of steel is defined as working

(a) at its re-crystallization temperature

(b) above its re-crystallization temperature

(c) below its re-crystallization temperature

(d) at two thirds of the melting temperature of the metal

26. Quality screw threads are produced by

(a) thread milling (b) thread chasing

(c) thread cutting with single point tool (d) thread casting

27. As tool and work are not in contact in EDM process

(a) no relative motion occurs between them

(b) no water of tool occurs

(c) no power is consumed during metal cutting

(d) no force between tool and work occurs

28. The dimensional limits on a shaft of 25h7 are

(a) 25.000, 25.021 mm (b) 25.000, 24.979 mm

(c) 25.000, 25.007 mm (d) 25.000, 24.993 mm

29. When a cylinder is located in a Vee-block, the number of degrees of freedom which area arrested is

(a) 2 (b) 4 (c) 7 (d) 8

30. The symbol used for Transport in work-study is

(a) ⇒ (b) T (c) ▭ (d) ∇

ZOLLEGE.in

Question No.31 to 80 will carry 2 marks each

31. Consider the system of simultaneous equations

$$x + 2y + z = 6$$
$$2x + y + 2z = 6$$
$$x + y + z = 5$$

The system has

(a) unique solution
(b) infinite number of solutions
(c) no solution
(d) exactly two solutions

32. The area enclosed between the parabola $y = x^2$ and the straight line y = x is

(a) $\frac{1}{8}$ (b) $\frac{1}{6}$ (c) $\frac{1}{3}$ (d) $\frac{1}{2}$

33. The solution of the differential equation $\frac{dy}{dx} + y^2 = 0$ is

(a) $y = \frac{1}{x + c}$ (b) $y = \frac{-x^3}{3} + c$ (c) ce^x

(d) unsolvable as equation is non-linear

34. The vector field $\vec{F} = x\vec{i} - y\vec{j}$ (where $\vec{i}$ and $\vec{j}$ are unit vectors) is:

(a) divergence free, but not irrotational
(b) irrotational, but not divergence free
(c) divergence free and irrotational
(d) neither divergence free nor irrotational

35. Laplace transform of the function sin ωt is

(a) $\frac{s}{s^2 + \omega^2}$ (b) $\frac{\omega}{s^2 + \omega^2}$ (c) $\frac{s}{s^2 - \omega^2}$ (d) $\frac{\omega}{s^2 - \omega^2}$

36. A box contains 5 black and 5 red balls. Two balls are randomly picked one after another from the box, without replacement. The probability for both balls being red is

(a) $\frac{1}{90}$ (b) $\frac{1}{5}$ (c) $\frac{19}{90}$ (d) $\frac{2}{9}$

ZOLLEGE.in

37. A truss consists of horizontal members (AC, CD, DB and EF) and vertical members (CE and DE) having length 1 each. The members AE, DE and BF are inclined at 45° to the horizontal. For the uniformly distributed load 'p' per unit length on the member EF of the truss shown in figure given below, the force in the member CD is

(a) $\frac{pl}{2}$

(b) pl

(c) 0

(d) $\frac{2pl}{3}$

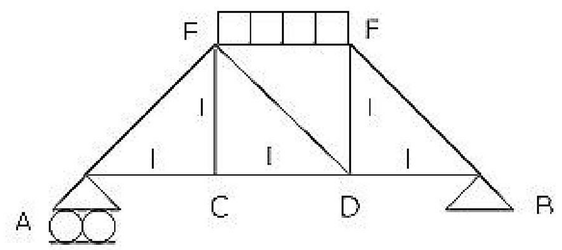

38. A bullet of mass 'm' travels at a very high velocity v (as shown in the figure) and gets embedded inside the block of mass 'M' initially at rest on a rough horizontal floor. The block with the bullet is seen to move a distance 's' along the floor. Assuming μ to be the coefficient to kinetic friction between the block and the floor and 'g' the acceleration due to gravity what is the velocity v of the bullet?

(a) $\frac{M+m}{m}\sqrt{2\mu gs}$

(b) $\frac{M-m}{m}\sqrt{2\mu gs}$

(c) $\frac{\mu(M+m)}{m}\sqrt{2gs}$

(d) $\frac{M}{m}\sqrt{2\mu gs}$

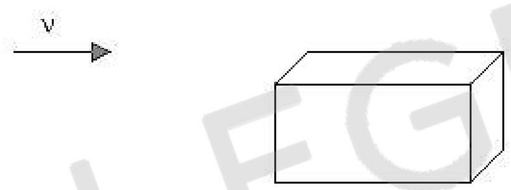

39. A simply supported laterally loaded beam was found to deflect more than a specified value. Which of the following measures will reduce the deflection?

(a) Increase the area moment of inertia

(b) Increase the span of the beam

(c) Select a different material having lesser modulus of elasticity

(d) Magnitude of the load to be increased

40. A shaft subjected to torsion experiences a pure shear stress τ on the surface. The maximum principal stress on the surface, which is at 45° to the axis, will have a value

(a) τ cos 45°

(b) 2τ cos 45°

(c) τ $\cos^2$ 45°

(d) 2τ sin 45 cos 45°

ZOLLEGE.in

41. For a certain engine having an average speed of 1200 rpm, a flywheel approximated as a solid disc, is required for keeping the fluctuation of speed within 2% about the average speed. The fluctuation of kinetic energy per cycle is found to be 2kJ. What is the least possible mass of the flywheel if its diameter is not exceed 1m?

(a) 40 kg (b) 51 kg (c) 62 kg (d) 73 kg

42. A flexible rotor-shaft system comprises of a 10 kg rotor disc placed in the middle of a mass-less shaft of diameter 30 mm and length 500mm between bearings (shaft is being taken mass-less as the equivalent mass of the shaft is included in the rotor mass) mounted at the ends. The bearings are assumed to simulate simply supported boundary conditions. The shaft is made of steel for which the value of E is $2.1\times10^{11} Pa$. What is the critical speed of rotation of the shaft?

(a) 60 Hz (b) 90 Hz (c) 135 Hz (d) 180 Hz

43. Square key of side 'd/4' each and length l is used to transmit torque 'T' from the shaft of diameter 'd' to the hub of a pulley. Assuming the length of the key to be equal to the thickness of the pulley, the average shear stress developed in the key is given by

(a) $\frac{4T}{ld}$ (b) $\frac{16T}{ld^2}$ (c) $\frac{8T}{ld^2}$ (d) $\frac{16T}{\pi d^3}$

44. In a band brake the ratio of tight side band tension to the tension on the slack side is 3. If the angle of overlap of band on the drum is 180° the coefficient of friction required between drum and the band is

(a) 0.20 (b) 0.25 (c) 0.30 (d) 0.35

45. A water container is kept on a weighting balance. Water from a tap is falling vertically into the container with a volume flow rate of Q; the velocity of the water when it hits the water surface is U. At a particular instant of time the total mass of the container and water is m. the force registered by the weighing balance at this instant of time is

(a) $mg + \rho QU$ (b) $mg + 2\rho QU$

(c) $mg + \rho QU^2/2$ (d) $\rho QU^2/2$

46. In a counter flow heat exchanger, for the hot fluid the heat capacity = 2kJ/kg K, mass flow rate = 5 kg/s, inlet temperature =150°C, outlet temperature =100°C. for the cold fluid, heat capacity = 4 kJ/kg K, mass flow rate = 10 kg/s, inlet temperature=20°C. Neglecting heat transfer to the surroundings, the outlet temperature of the cold fluid in °C is

(a) 7.5 (b) 32.5 (c) 45.5 (d) 70.0

ZOLLEGE.in

47. Air flows through a venturi and into atmosphere. Air density is ρ; atmospheric pressure is P_a; throat diameter is D_t; exit diameter is D and exit velocity is U. the throat is connected to a cylinder containing a frictionless piston attached to a spring. The spring constant is k. the bottom surface of the piston is exposed to atmosphere. Due to the flow, the piston moves by distance x. assuming incompressible frictionless flow, x is

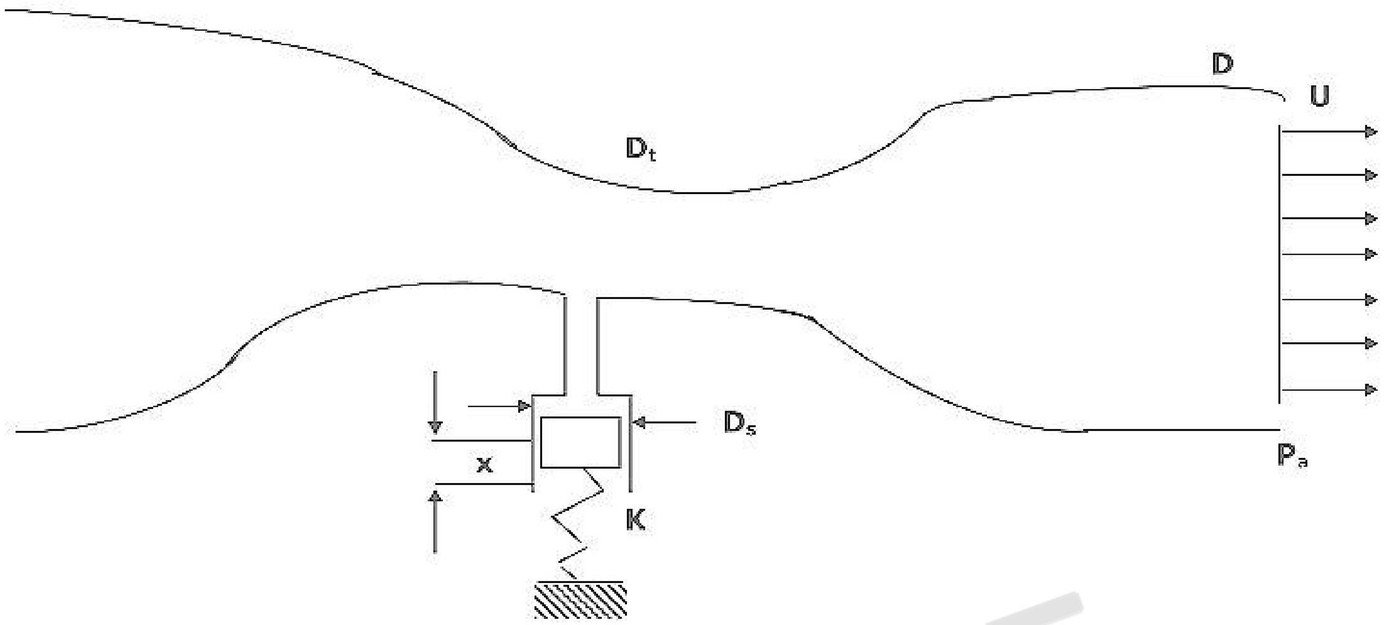

(a) $(\rho QU^2/2)\pi D_s^2$

(b) $(\rho U^2/8k)\left(\frac{D^2}{D_t^2}-1\right)\pi D_s^2$

(c) $(\rho U^2/2k)\left(\frac{D^2}{D_t^2}-1\right)\pi D_s^2$

(d) $(\rho U^2/8k)\left(\frac{D^4}{D_t^4}-1\right)\pi D_s^2$

48. Consider a laminar boundary layer over a heated flat plate. The free stream velocity is U_∞. At some distance x from the leading edge the velocity boundary layer thickness is δ_v and the thermal boundary layer thickness is δ_T. If the Prandtl number is greater than 1, then

(a) $\delta_v > \delta_T$

(b) $\delta_T > \delta_v$

(c) $\delta_v \approx \delta_T \sim (U_\infty x)^{1/2}$

(d) $\delta_v \approx \delta_T \sim x^{-1/2}$

49. Considering the relationship TdS=dU+pdV between the entropy (S), internal energy (U), pressure (p), temperature (T) and volume (V), which of the following statements is correct?

(a) It is applicable only for a reversible process

(b) For an irreversible process, TdS > dU + pdV

(c) It is valid only for an ideal gas

(d) It is equivalent to 1 law, for a reversible process

ZØLLEGE.in

50. In a gas turbine, hot combustion products with the specific heats C_p = 0.98 kJ/kgK, C_v=0.7538 kJ/kg K enter the turbine at 20 bar, 1500 K and exit at 1 bar. The isoentropic efficiency of the turbine is 0.94. The work developed by the turbine per kg of gas flow is

(a) 689.64 kJ/kg (b) 794.66 kJ/kg

(c) 1009.72 kJ/kg (d) 1312.00 kJ/kg

51. An automobile engine operates at a fuel air ratio of 0.05, volumetric efficiency of 90% and indicated thermal efficiency of 30%. Given that the calorific value of the fuel is 45 MJ/kg and the density of air at intake is 1 kg/m^3, the indicated mean effective pressure for the engine is

(a) 6.075 bar (b) 6.75 bar (c) 67.5 bar (d) 243 bar

52. For an engine operating on air standard Otto cycle, the clearance volume is 10% of the swept volume. The specific heat ratio of air is 1.4. the air standard cycle efficiency is

(a) 38.3% (b) 39.8% (c) 60.2% (d) 61.7%

53. A centrifugal pump running at 500 rpm and at its maximum efficiency is delivering a head of 30m at a flow rate of 60 litres per minute. If the rpm is changed to 1000, then the head H in metres and flow rate Q in litres per minute at maximum efficiency are estimated to be

(a) H = 60, Q = 120 (b) H = 120, Q = 120

(c) H = 60, Q = 480 (d) H = 120, Q = 30

54. Hardness of steel greatly improves with

(a) annealing (b) cyaniding (c) normalizing (d) tempering

55. With a solidification factor of 0.97×97^6 s/m^2, the solidification time (in seconds) for a spherical casting of 200 mm diameter is

(a) 539 (b) 1078 (c) 4311 (d) 3233

56. A shell of 100 mm diameter and 100 mm height with the corner radius of 0.4 mm is to be produced by cup drawing. The required blank diameter is

(a) 118 mm (b) 161 mm (c) 224 mm (d) 312 mm

57. A brass billet is to be extruded from its initial diameter of 100 mm to a final diameter of 50 mm. The working temperature of 700°C and the extrusion constant is 250 MPa. The force required for extrusion is

(a) 5.44 MN (b) 2.72 MN (c) 1.36 MN (d) 0.36 MN

ZOLLEGE.in

58. A metal disc of 20 mm diameter is to be punched from a sheet of 2 mm thickness. The punch and the die clearance is 3%. The required punch diameter is

(a) 19.88 mm (b) 19.94 mm (c) 20.06 mm (d) 20.12 mm

59. A batch of 10 cutting tools could produce 500 components while working at 50 rpm with a tool feed of 0.25 mm/rev and depth of cut of 1mm. A similar batch of 10 tools of the same specification could produce 122 components while working at 80 rpm with a feed of 0.25 mm/rev and 1 mm depth of cut. How many components can be produced with one cutting tool at 60 rpm?

(a) 29 (b) 31 (c) 37 (d) 42

60. A threaded nut of M16, ISO metric type, having 2 mm pitch with a pitch diameter of 14.701 mm is to be checked for its pitch diameter using two or three numbers of balls or rollers of the following series

(a) Rollers of 2 mm φ (b) Rollers of 1.155 mm φ

(c) Balls of 2 mm φ (d) Balls of 1.155 mm φ

61. Two slip gauges of 10mm width measuring 1.000 mm and 1.002 mm are kept side by side in contact with each other lengthwise. An optical flat is kept resting on the slip gauges as shown in the figure. Monochromatic light of wavelength 0.0058928 mm is used in the inspection. The total number of straight fringes that can be observed on both slip gauges is

(a) 2

(b) 6

(c) 8

(d) 13

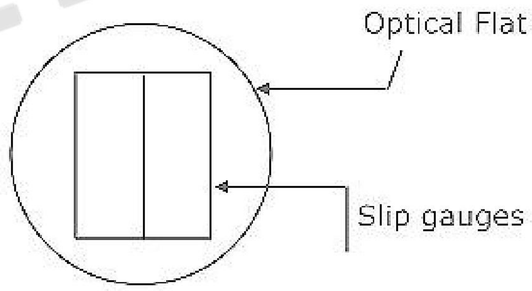

62. A part shown in the figure is machined to the sizes given below

P = 35.00±0.08mm

Q = 12.00±0.02mm

R = $13.00^{+0.04}_{-0.02} mm$

With 100% confidence, the resultant dimension W will have the specification

(a) 9.99±0.03mm (b) 9.99±0.13mm

(c) 10.00±0.03mm (d) 10.00±0.13mm

ZOLLEGE.in

63. Two machines of the same production rate are available for use. On machine 1, the fixed cost is Rs.100 and the variable cost is Rs.2 per piece produced. The corresponding numbers for the machine 2 are Rs.200 and Re.1 respectively. The sale price of the first 800 units is Rs.3.50 per unit and subsequently it is only Rs.3.00. The breakeven production rate for each machine is

(a) 75 (b) 100 (c) 150 (d) 600

64. A residential school stipulates the study hours as 8.00 pm to 10.30 pm. Warden makes random checks on a certain student 11 occasions a day during the study hours over a period of 10 days and observes that he is studying on 71 occasions. Using 95% confidence interval, the estimated minimum hours of his study during that 10 day period is

(a) 8.5 hours (b) 13.9 hours (c) 16.1 hours (d) 18.4 hours

65. The sale of cycles in a shop in four consecutive months are given as 70, 68, 82 95. Exponentially smoothing average method with a smoothing factor of 0.4 is used in forecasting. The expected number of sales in the next month is

(a) 59 (b) 72 (c) 86 (d) 136

66. Market demand for springs is 8,00,000 per annum. A company purchases these springs in lots and sells them. The cost of making a purchase order is Rs.1,200. The cost of storage of springs is Rs.120 per stored piece per annum. The economic order quantity is

(a) 400 (b) 2,828 (c) 4,000 (d) 8,000

67. A manufacturer produces two types of products, 1 and 2, at production levels of x_1 and x_2 respectively. The profit is given is $2x_1 + 5x_2$. The production constraints are

$$x_1 + 3x_2 \le 40$$
$$3x_1 + x_2 \le 24$$
$$x_1 + x_2 \le 10$$
$$x_1 > 0, x_2 > 0$$

The maximum profit which can meet the constraints is

(a) 29 (b) 38 (c) 44 (d) 75

ZOLLEGE.in

68. A project consists of activities A to M shown in the net in the following figure with the duration of the activities marked in days

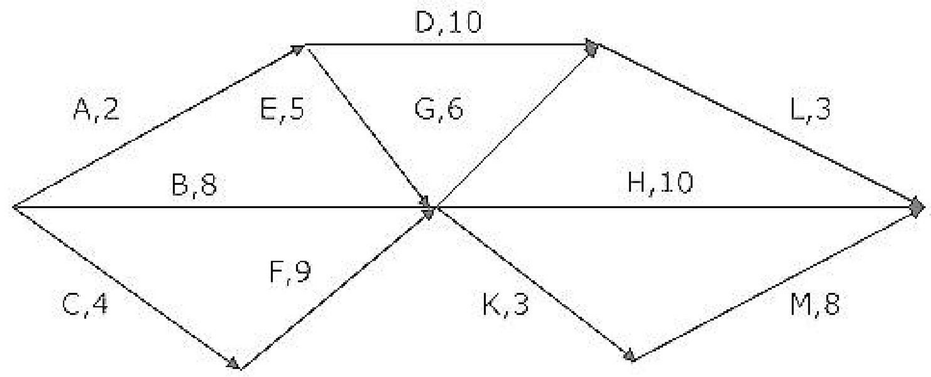

The project can be completed

(a) between 18, 19 days
(b) between 20, 22 days
(c) between 24, 26 days
(d) between 60, 70 days

69. Match the following

P	Curtis	1	Reaction steam turbine
Q	Rateau	2	Gas turbine
R	Kaplan	3	Velocity compounding
S	Francis	4	Pressure compounding
		5	Impulse water turbine
		6	Axial turbine
		7	Mixed flow turbine
		8	Centrifugal pump

(a) P – 2 Q – 1 R – 7 S - 6
(b) P – 3 Q – 1 R – 5 S - 7
(c) P – 1 Q – 3 R – 1 S - 5
(d) P – 3 Q – 4 R – 7 S - 6

70. Match the following

	Work material		***Type of joining***
P	Aluminium	1	Submerged Arc Welding
Q	Die Steel	2	Soldering
R	Copper Wire	3	Thermit Welding
S	Titanium Sheet	4	Atomic Hydrogen Welding
		5	Gas Tungsten Arc Welding
		6	Laser Beam Welding

ZOLLEGE.in

(a) P – 2 Q – 1 R – 7 S - 6 (b) P – 3 Q – 1 R – 5 S - 7

(c) P – 1 Q – 3 R – 1 S - 5 (d) P – 3 Q – 4 R – 7 S - 6

Data for Q.71 – 72 are given below. Solve the problems and choose correct answers.

A reel of mass 'm' and radius of gyration 'k' is rolling down smoothly from rest with one end of the thread wound on it held in the ceiling as depicted in the figure. Consider the thickness of the thread and its mass negligible in comparison with radius 'r' of the hub and the reel mass 'm'. Symbol 'g' represents the acceleration due to gravity.

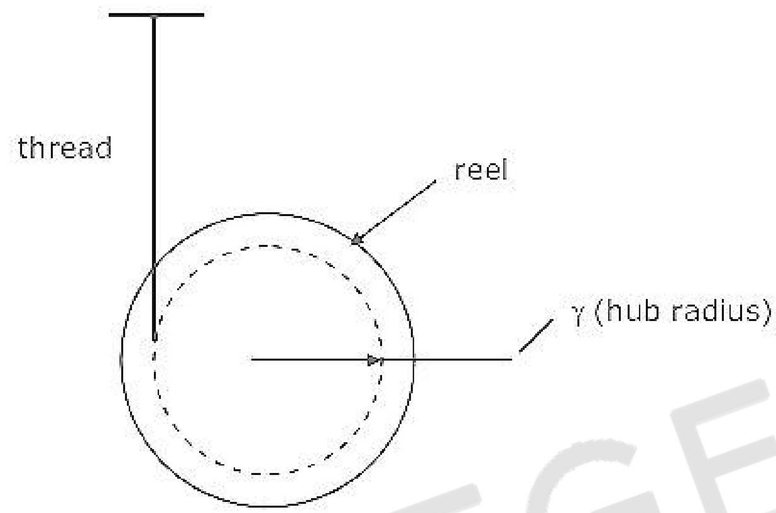

71. The linear acceleration of the reel is

(a) $\frac{gr^2}{(r^2+k^2)}$ (b) $\frac{gk^2}{(r^2+k^2)}$ (c) $\frac{grk}{(r^2+k^2)}$ (d) $\frac{mgr^2}{(r^2+k^2)}$

72. The tension in the thread is

(a) $\frac{mgr^2}{(r^2+k^2)}$ (b) $\frac{mgrk}{(r^2+k^2)}$ (c) $\frac{mgk^2}{(r^2+k^2)}$ (d) $\frac{mg}{(r^2+k^2)}$

Data for Q.73 – 74 are given below. Solve the problems and choose correct answers.

The state of stress at a point 'P' in a two dimensional loading is such that the Mohr's circle is a point located at 175 MPa on the positive normal stress axis.

73. Determine the maximum and minimum principal stresses respectively from the Mohr's circle

(a) + 175 MPa, -175 MPa (b) + 175 MPa, -175 MPa

(c) 0, -175 MPa (d) 0, 0

ZOLLEGE.in

74. Determine the directions maximum and minimum principal stresses at the point 'P' from the Mohr's circle

(a) 0, 90° (b) 90°,0 (c) 45°, 135° (d) all directions

Data for Q.75 – 76 are given below. Solve the problems and choose correct answers.

The circular disc shown in its plan view in the figure rotates in a plane parallel to the horizontal plane about the point O at a uniform angular velocity ω. Two other points A and B are located on the line OZ at distances r_A and r_B from O respectively.

75. The velocity of point B with respect to point A is a vector of magnitude

(a) 0

(b) $\omega(r_B - r_A)$ and direction opposite to the direction of motion of point B

(c) $\omega(r_B - r_A)$ and direction same as the direction of motion of point B

(d) $\omega(r_B - r_A)$ and direction being from O to Z

76. The acceleration of point B with respect to point A is a vector of magnitude

(a) 0

(b) $\omega(r_B - r_A)$ and direction same as the direction of motion of point B

(c) $\omega(r_B - r_A)$ and direction opposite to the direction of motion of point B

(d) $\omega(r_B - r_A)$ and direction being from Z to O

Data for Q.77 – 78 are given below. Solve the problems and choose correct answers.

A uniform rigid slenderbar of mass 10 kg, hinged at the left end is suspended with the help of spring and damper arrangement as shown in the figure where K = 2kN/m, C =500 Ns/m and the stiffness of the torsional spring K_0 is 1 kN/m/rad. Ignore the hinge dimensions.

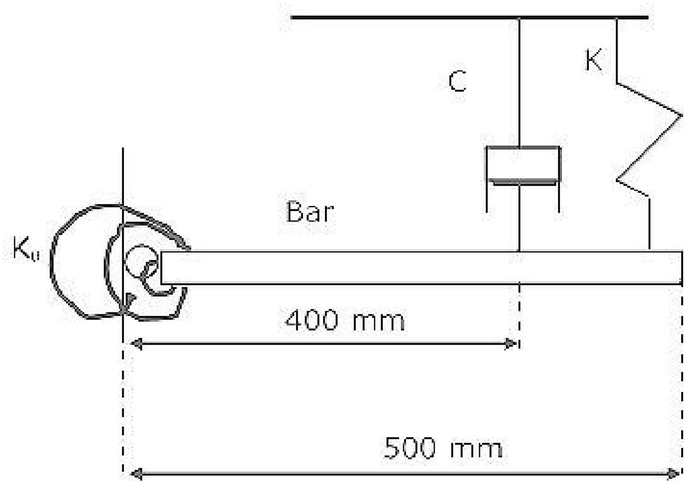

ZOLLEGE.in

77. The un-damped natural frequency of oscillations of the bar about the hinge point is

(a) 42.43 rad/s (b) 30 rad/s (c) 17.32 rad/s (d) 14.14 rad/s

Data for Q.78 – 80 are given below. Solve the problems and choose correct answers.

78. The damping coefficient in the vibration equation is given by

(a) 500 Nms/rad (b) 500 N/(m/s) (c) 80 Nms/rad (d) 80 N/(m/s)

79. Z_2 and Z_4 are

(a) 64 and 45 (b) 45 and 64 (c) 48 and 60 (d) 60 and 48

80. The center distance in the second stage is

(a) 90 mm (b) 120 mm (c) 160 mm (d) 240 mm

Data for Q.81 – 82 are given below. Solve the problems and choose correct answers.

A syringe with a frictionless plunger contains water and has at its end a 100 mm long needle of 1 mm diameter. The internal diameter of the syringe is 10 mm. Water density is 1000 kg/m^3. The plunger is pushed in at 10 mm/s and the water comes out as a jet.

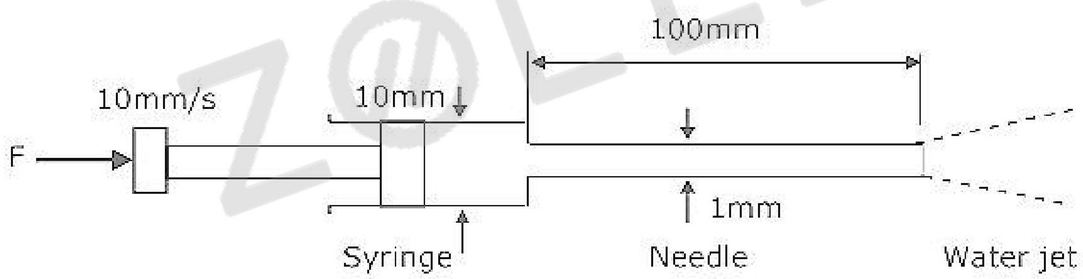

81. Assuming ideal flow, the force F in Newton's required on the plunger to push out the water is

(a) 0 (b) 0.04 (c) 0.13 (d) 1.15

82. Neglect losses in the cylinder and assume fully developed laminar viscous flow throughout the needle; the Darcy friction factor is 64/Re. Where Re is the Reynolds number. Given that the viscosity of water is 1.0×10^{-3} kg/sm, the force F in newtons required on the plunger is

(a) 0.13 (b) 0.16 (c) 0.3 (d) 4.4

ZOLLEGE.in

Data for Q.83 – 84 are given below. Solve the problems and choose correct answers.

Heat is being transferred by convection from water at 48°C to a glass plate whose surface that is exposed to the water is at 40°C. The thermal conductivity of water is 0.6 W/mK and the thermal conductivity of glass is 1.2 W/mK. The spatial gradient of temperature in the water at the water-glass interface is $dT/dy = 1\times10^4$ K/m.

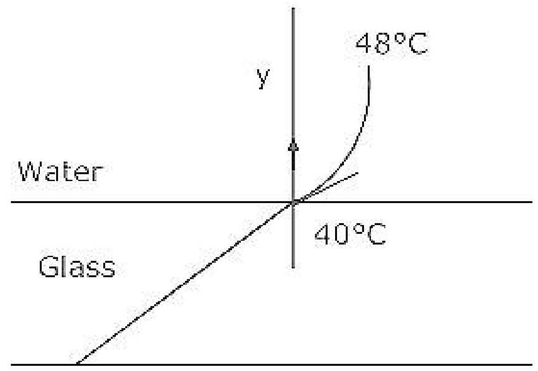

83. The value of the temperature gradient in the glass at the water-glass interface is K/m is

(a) -2×10^4 (b) 0.0 (c) 0.5×10^4 (d) 2×10^4

84. The heat transfer coefficient h in W/m^2 K is

(a) 0.0 (b) 4.8 (c) 6 (d) 750

Data for Q.85 – 86 are given below. Solve the problems and choose correct answers.

Nitrogen gas (molecular weight 28) is enclosed in a cylinder by a piston, at the initial condition of 2 bar, 298 K and 1 m^3. In a particular process, the gas slowly expands under isothermal condition, until the volume becomes $2m^3$. Heat exchange occurs with the atmosphere at 298 K during this process.

85. The work interaction for the Nitrogen gas is

(a) 200 kJ (b) 138.6 kJ (c) 2 kJ (d) -200 kJ

86. The entropy change for the Universe during the process in kJ/K is

(a) 0.4652 (b) 0.0067 (c) 0 (d) -0.6711

Data for Q.87 – 88 are given below. Solve the problems and choose correct answers.

A refrigerator based on ideal vapour compression cycle operates between the temperature limits of –20°C and 40°C. The refrigerant enters the condenser as saturated vapour and leaves as saturated liquid. The enthalpy and entropy values for saturated liquid and vapour at these temperatures are given in the table below.

ZØLLEGE.in

T(°C)	h_f(kJ/kg)	h_g(kJ/kg)	s_f(kJ/kg K)	s_g(kJ/kg K)
-20	20	180	0.07	0.7366
40	80	200	0.3	0.67

87. If refrigerant circulation rate is 0.025 kg/s, the refrigeration effect is equal to

(a) 2.1 kW (b) 2.5 kW (c) 3.0 kW (d) 4.0 kW

88. The COP of the refrigerator is

(a) 2.0 (b) 2.33 (c) 5.0 (d) 6.0

Data for Q.89 – 90 are given below. Solve the problems and choose correct answers.

A cylinder is turned on a lathe with orthogonal machining principle. Spindle rotates at 200 rpm. The axial feed rate is 0.25 mm per revolution. Depth of cut is 0.4mm. the rake angle is 10°. In the analysis it is found that the shear angle is 27.75°.

89. The thickness of the produced chip is

(a) 0.511 mm (b) 0.528 mm (c) 0.818 mm (d) 0.846 mm

90. In the above problem, the coefficient of friction at the chip tool interface obtained using Earnest and Merchant theory is

(a) 0.18 (b) 0.36 (c) 0.71 (d) 0.908

ZØLLEGE.in

ZØLLEGE.in