## SECTION - A

1. This question has TWENTY-FIVE statements. Each statement is accompanied by four answers of which only one is correct. Indicate the correct answer as A, B, C or D on the first page of the answer book. Each statement carries ONE mark.

1.1 The impulse response of an initially relaxed linear system is $e^{-2t}U(t)$. To produce a response of $te^{-2t}U(t)$, the input must be equal to

(a) $2e^{-t}U(t)$ (b) $\frac{1}{2}e^{-2t}U(t)$ (c) $e^{-2t}U(t)$ (d) $e^{-t}U(t)$

1.2 The closed loop transfer function of a control system is given by

$$\frac{C(s)}{R(s)} = \frac{2(s-1)}{(s+2)(s+1)}$$

For a unit step input the output is

(a) $-3e^{-2t} + 4e^{-t} - 1$ (b) $-3e^{-2t} - 4e^{-t} + 1$

(c) zero (d) infinity

1.3 The Laplace transformation of $f(t)$ is $F(s)$. Given $F(s) = \frac{\omega}{s^2 + \omega^2}$, the final value of $f(t)$ is:

(a) infinity (b) zero

(c) one (d) none of the above

1.4 A system is described by the state equation $XX = AX + BU$. The output is given by $Y = CX$

where $A = \begin{bmatrix} -4 & -1 \\ 3 & -1 \end{bmatrix}, B = \begin{bmatrix} 1 \\ 1 \end{bmatrix}, C = \begin{bmatrix} 1, & 0 \end{bmatrix}$. Transfer function $G(s)$ of the system is:

(a) $\frac{s}{s^2 + 5s + 7}$ (b) $\frac{1}{s^2 + 5s + 7}$ (c) $\frac{s}{s^2 + 3s + 2}$ (d) $\frac{1}{s^2 + 3s + 2}$

1.5 The rms value of the periodic waveform $e(t)$, shown in figure is:

(a) $\sqrt{\frac{3}{2}}A$ (b) $\sqrt{\frac{2}{3}}A$

(c) $\sqrt{\frac{1}{3}}A$ (d) $\sqrt{2}A$

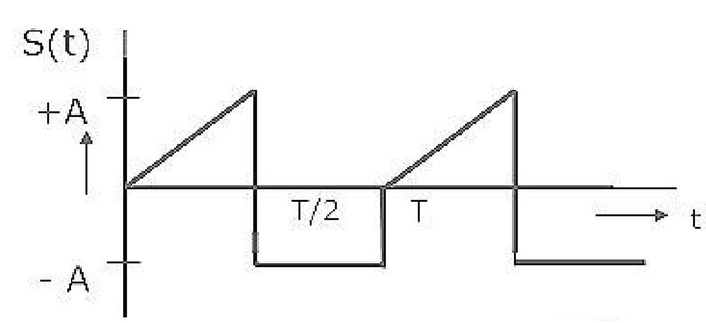


ZOLLEGE.in

1.6 A spherical conductor of radius 'a' with charge 'q' is placed concentrically inside an uncharged and unearthed spherical conducting shell of inner and outer radii $r_1$ and $r_2$ respectively. Taking potential to be zero at infinity, the potential at any point P within the shell $(r_1 < r < r_2)$ will be:

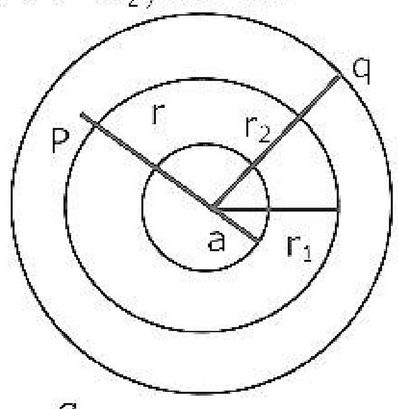


(a) $\frac{q}{4\pi\varepsilon_0 r}$ (b) $\frac{q}{4\pi\varepsilon_0 a}$ (c) $\frac{q}{4\pi\varepsilon_0 r_2}$ (d) $\frac{q}{4\pi\varepsilon_0 r_1}$

1.7 A monochromatic plane electromagnetic wave travels in vacuum in the position x direction (x, y, z system of coordinates). The electric and magnetic fields can be expressed as

(a) $E(x,t) = E_0 \cos(kx - \omega t)\bar{a}_y$
$H(x,t) = H_0 \cos(kx - \omega t)\bar{a}_z$

(b) $E(x,t) = E_0 \cos(kx - \omega t)\bar{a}_y$
$H(x,t) = H_0 \cos\left(kx - \omega t - \frac{\pi}{2}\right)\bar{a}_z$

(c) $E(x,t) = E_0 \cos(kx - \omega t)\bar{a}_y$
$H(x,t) = -H_0 \cos(kx - \omega t)\bar{a}_z$

(d) $E(x,t) = E_0 \cos(kx - \omega t)\bar{a}_y$
$H(x,t) = -H_0 \cos\left(kx - \omega t - \frac{\pi}{2}\right)\bar{a}_z$

1.8 Supply to one terminal of a delta-wye connected three-phase core type transformer which is on no-load, fails. Assuming magnetic circuit symmetry, voltages on the secondary side will be:

(a) 230, 230, 115 (b) 230, 115, 115
(c) 345, 115, 115 (d) 345, 0, 345

1.9 An induction motor is fed from a balanced three phase supply at rated voltage and frequency through a bank of three single phase transformers connected in delta-delta. One unit of the bank develops fault and is removed. Then,

(a) single phasing will occur and the machine fails to start

(b) single phasing will not occur but the motor terminal voltages will become unbalanced and the machine can be loaded to the extent of 57.7% of its rating.

(c) the machine can be loaded to the extent of 57.7% of its rating with balanced supply at its terminals.

ZOLLEGE.in

(d) the machine can be loaded to the extent of $66\frac{2}{3}\%$ with balanced supply at its terminals.

1.10 A synchronous motor on load draws a current at a leading power factor angle $\phi$. If the internal power factor angle – which is the phase angle between the excitation e.m.f. and the current in the time phasor diagram is $\Omega$, then the air gap excitation m.m.f lags the armature m.m.f by

(a) $\psi$ (b) $\frac{\pi}{2}+\psi$ (c) $\frac{\pi}{2}-\psi$ (d) $\psi+\Phi$

1.11 A differentially compounded d.c. motor with interpoles and with brushes on the neutral axis is to be driven as a generator in the same direction with the same polarity of the terminal voltage. It will then

(a) be a cumulatively compound generator but the interpole coil connections are to be reversed

(b) be a cumulatively compounded generator without reversing the interpole coil connections.

(c) be a differentially compounded generator without reversing the interpole coil connections

(d) be a differentially compounded generator but the interpole coil connections are to be reversed.

1.12 The surge impedance of a 400 km long overhead transmission line is 400 ohms. For a 200 km length of the same line, the surge impedance will be

(a) 200 Ω (b) 800 Ω (c) 400 Ω (d) 100 Ω

1.13 The insulation level of a 400 kV EHV overhead transmission line is decided on the basis of

(a) lightning over voltage (b) switching over voltage

(c) corona inception voltage (d) radio and TV interference

1.14 In order to have a lower cost of electrical energy generation,

(a) the load factor and diversity factor should be low

(b) the load factor should be low but diversity factor should be high

(c) the load factor should be high but diversity factor should be low

(d) the load factor and diversity factor should be high

1.15 The main criterion for selection of the size of a distribution for a radial distribution system is:

(a) voltage drop (b) corona loss (c) temperature rise

ZOLLEGE.in

1.16 The insulation resistance of a cable of length 10 km is 1 MΩ. For a length of 100 km of the same cable, the insulation resistance will be

(a) 1 MΩ (b) 10 MΩ (c) 0.1 MΩ (d) 0.01 MΩ

1.17 A $3\frac{1}{2}$ digit, 2 V full scale slope ADC has its integration time set to 300 ms. if the input to the ADC is $(1+1\sin 314t)V$, then the ADC output will be

(a) 1.000 (b) 1.999 (c) 1.414 (d) 1.500

1.18 Four ammeters M1, M2, M3 and M4 with the following specifications are available.

| Instrument | Type | Full scale value (A) | Accuracy % of FS |
|---|---|---|---|
| M1 | $3\frac{1}{2}$ digit dual slope | 20 | ±0.10 |
| M2 | PMMC | 10 | ±0.20 |
| M3 | Electrodynamic | 5 | ±0.50 |
| M4 | Moving iron | 1 | ±1.00 |

A current of 1A is to be measured. To obtain minimum error in the reading, one should select meter

(a) M1 (b) M2 (c) M3 (d) M4

1.19. A Kelvin double bridge is best suited for the measurement of

(a) inductance (b) capacitance

(c) low resistance (d) high resistance

1.20. In an 8085 microprocessor, after the execution of XRA A instruction

(a) the carry flag is set (b) the accumulator contains $FF_H$

(c) the zero flag is set

(d) the accumulator contents are shifted left by one bit

1.21. A certain oscilloscope with 4 cm by 4 cm screen has its own sweep output fed to its input. If the x and y sensitivities are same, the oscilloscope will display a

(a) triangular wave (b) diagonal line

(c) sine wave (d) circle

1.22. A single phase diode bridge rectifier supplies a highly inductive load. The load current can be assumed to be ripple free. The ac supply side current waveform will be:

ZOLLEGE.in

1.23. A dc to dc transistor chopper supplied from a fixed voltage dc source feeds a fixed resistive-inductive load and a free-wheeling diode. The chopper operates at 1 kHz and 50% duty cycle. Without changing the value of the average dc current through the load, if it is desired to reduce the ripple content of load current, the control action needed will be:

(a) increase the chopper frequency keeping its duty cycle constant

(b) increase the chopper frequency and duty cycle in equal ratio

(c) decrease only the chopper frequency

(d) decrease only the duty cycle.

1.24. An inverter capable of supplying a balanced three-phase variable voltage variable frequency output is feeding a three-phase induction motor rated for 50 Hz and 440V. The stator winding resistances of the motor are negligible small. During starting, the current inrush can be avoided without sacrificing the starting torque by suitably applying:

(a) low voltage at rated frequency

(b) low voltage keeping the V/f ratio constant

(c) rated voltage at low frequency

(d) rated voltage at rated frequency

1.25 The inverse of the matrix $S = \begin{bmatrix} 1 & -1 & 0 \\ 1 & 1 & 1 \\ 0 & 0 & 1 \end{bmatrix}$ is:

(a) $\begin{bmatrix} 1 & 0 & 1 \\ 0 & 0 & 0 \\ 0 & 1 & 1 \end{bmatrix}$ (b) $\begin{bmatrix} 0 & 1 & 1 \\ -1 & -1 & 1 \\ 1 & 0 & 1 \end{bmatrix}$ (c) $\begin{bmatrix} 2 & 2 & -2 \\ -2 & 2 & -2 \\ 0 & 2 & 2 \end{bmatrix}$ (d) $\begin{bmatrix} \frac{1}{2} & \frac{1}{2} & \frac{-1}{2} \\ \frac{-1}{2} & \frac{1}{2} & \frac{-1}{2} \\ 0 & 0 & 1 \end{bmatrix}$

**2.** This question consists of TWENTY-FIVE statements with blanks. Fill in the blanks with the correct answer. Each statement carries ONE mark.

2.1 Given the matrix $A = \begin{bmatrix} 0 & 1 & 0 \\ 0 & 0 & 1 \\ -6 & -11 & -6 \end{bmatrix}$. Its eigen values are _____

2.2. The steady state error due to a step input for type 1 system is _____

2.3. Closed loop stability implies that $[1 + G(s)H(s)]$ has only _____ in the left half of the s-plane

ZOLLEGE.in

2.4. The convolution of the functions $f_1(t) = e^{2t}U(t)$ and $f_1(t) = etU(t)$ is equal to _____

2.5. For the circuit shown in figure, the transfer function is equal to c

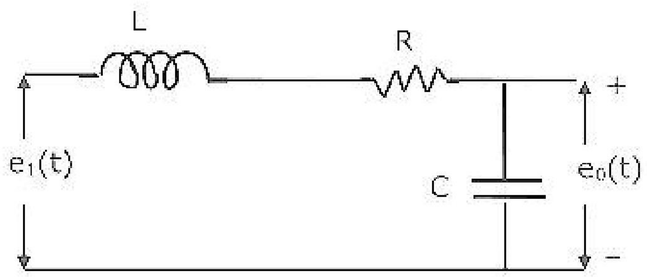


2.6. A series R-L-C circuit has the following parameter values: R 10Ω, L = 0.01 H, C = 100 mF.
The Q factor of the circuit at resonance is _____

2.7. An induction motor runs stably under constant torque load at 1250 rpm off a 50 Hz supply. Its number of poles is _____

2.8. The distribution factor for a 36 slot stator with three-phase, 8-pole winding, having 120° phase spread, is _____

2.9. When started by means of an auto transformer with 50% tapping, supply current at start of an induction motor is reduced to _____of that when started by means of a star-delta starter.

2.10. The percentage impedance of a 100 kVA, 11 kV/400V, delta/wye, 50 Hz transformer is 4.5%. For the circulation of half the full load current during short circuit test, with low voltage terminals shorted, the applied voltage on the high voltage side will be _____

2.11. The rated load of an underground cable is always _____ its natural load.

2.12. In load-flow analysis, a voltage-controlled bus is treated as a load bus in subsequent zero for a _____ fault.

2.13. The positive sequence component of the voltage at the point of fault in a power system is zero for a _____ fault.

2.14. If the inductance and capacitance of a power system network upto a circuit breaker location are 1 H and 0.01 μF respectively, the value of the shunt resistor across the circuit breaker, required for critical damping of the re-striking voltage is

ZOLLEGE.in

2.15. The distance relay with inherent directional property is known as _____ relay.

2.16. In the circuit of figure, ammeter $A_2$ reads 12 A and $A_3$ reads 9A. $A_1$ will read _____

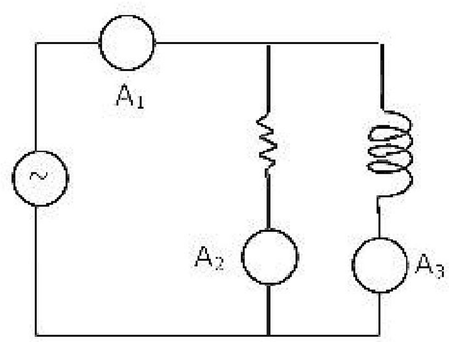


2.17. Two 100 V full scale PMMC type dc voltmeters having figure of merits (FOM) of 10 kΩ/V and 20 kΩ/V are connected in series. The series combination can eb used to measure a maximum dc voltage of _____

2.18. Fringing in a capacitance type transducer can be minimized by providing a _____

2.19. The common mode voltage of a unity gain (voltage follower) op-amp buffer in terms of its output voltage $V_0$ is _____

2.20. For a J-K flip-flop its J input is tied to its own Q output and its K input is connected to its own Q output. If the flip-flop is fed with a clock of frequency 1 MHz, its Q output frequency will be _____

2.21. An oscilloscope is operated in the X-Y mode. The figure 8 is displayed on the oscilloscope screen. If the frequency of the X-input is 1 kHz, the y-input frequency is _____

2.22. A three phase ac-to-dc diode bridge rectifier is supplied from a three-phase, 440V source. The rectifier supplies a purely resistive load. The average dc voltage across the load will be _____V.

2.23. A single phase inverter with square wave output voltage will have in its output waveform a fifth harmonic component equal to _____ percentage of the fundamental.

2.24. Consider the chopper circuit of figure. The chopper operates at 400 Hz and 50% duty cycle. The load current remains almost ripple free at 10A. Assuming the input voltage to be 200V and the devices to be ideal, the turn-off time available

ZØLLEGE.in

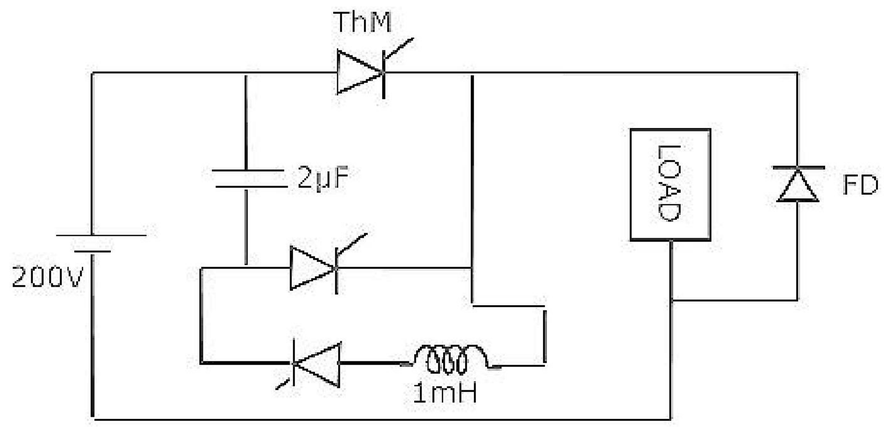


2.25. Figure, show two thyristors each rated 500A (continuous) sharing a load current. Current through thyristor y is 120A. The current through thyristor x will be nearly _____ A.

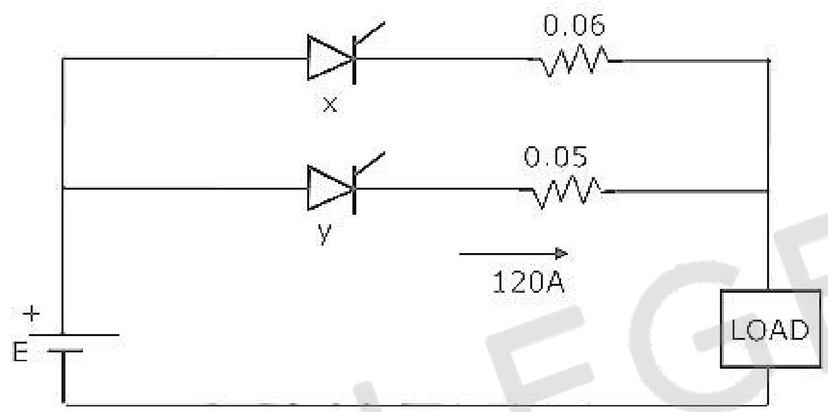


3. Questions 3.1 to 3.5 each consists of FIVE items on the left hand side marked A, B, C, D and E and five or more items on the right hand side marked P, Q, R, S, T and U. Pick the item on the right hand side that properly matches with the left hand side and write as a matched pair. [for eg. A- R; B – T]. Each proper matching carries ONE mark. Note: there are only FIVE pairs for a set.

3.1 Root locations of the characteristic Equations of second order systems

Unit step responses of second order systems

A.

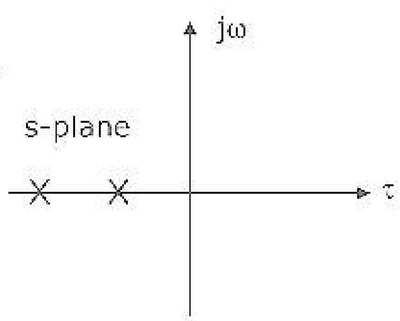


P.

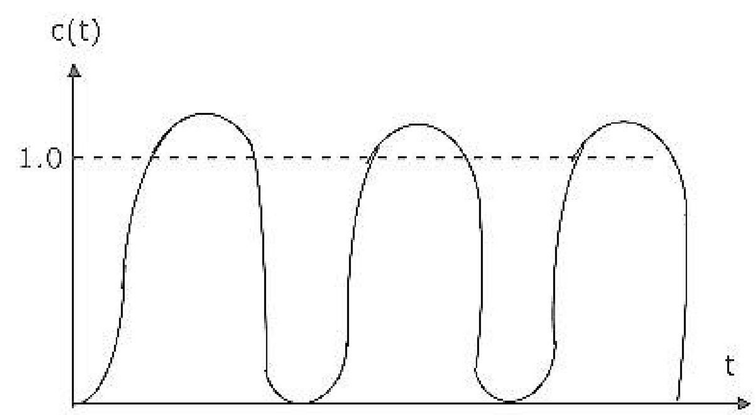


ZOLLEGE.in

B.

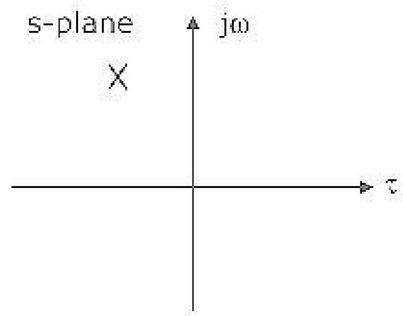


C.

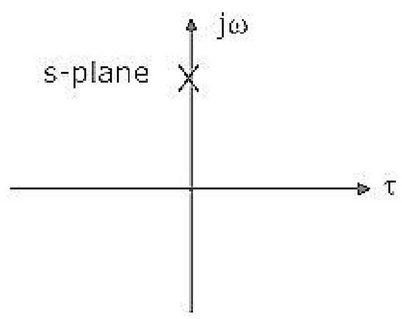


D.

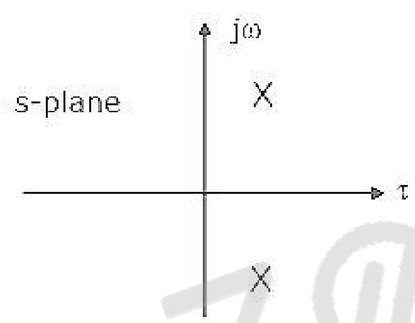


E.

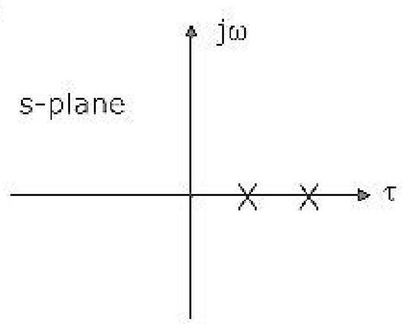


Q.

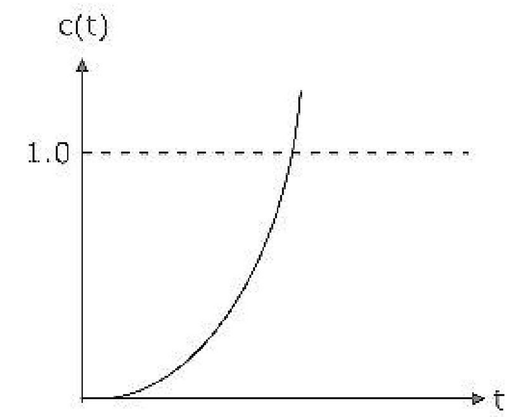


R.

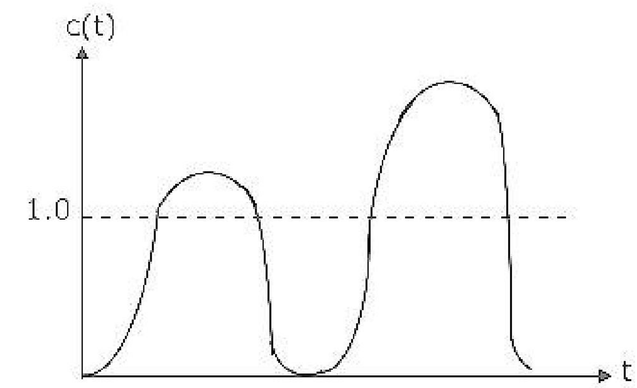


S.

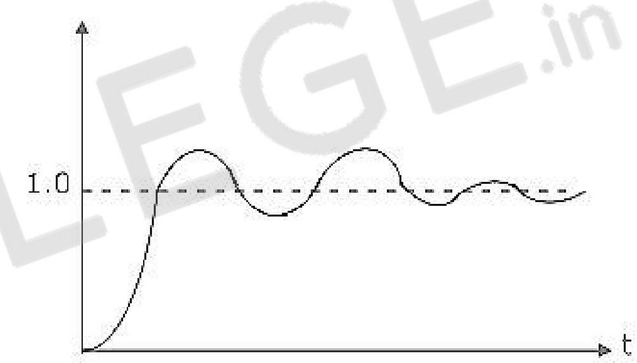


T.

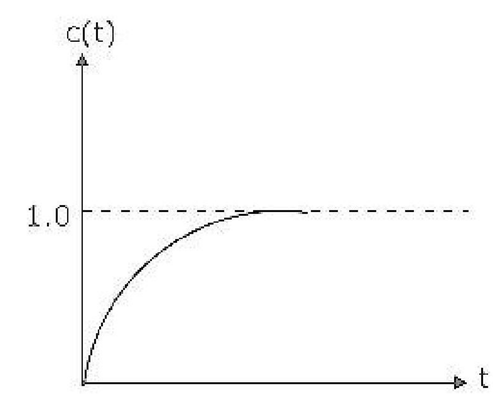


ZOLLEGE.in

3.2 Motor Characteristics

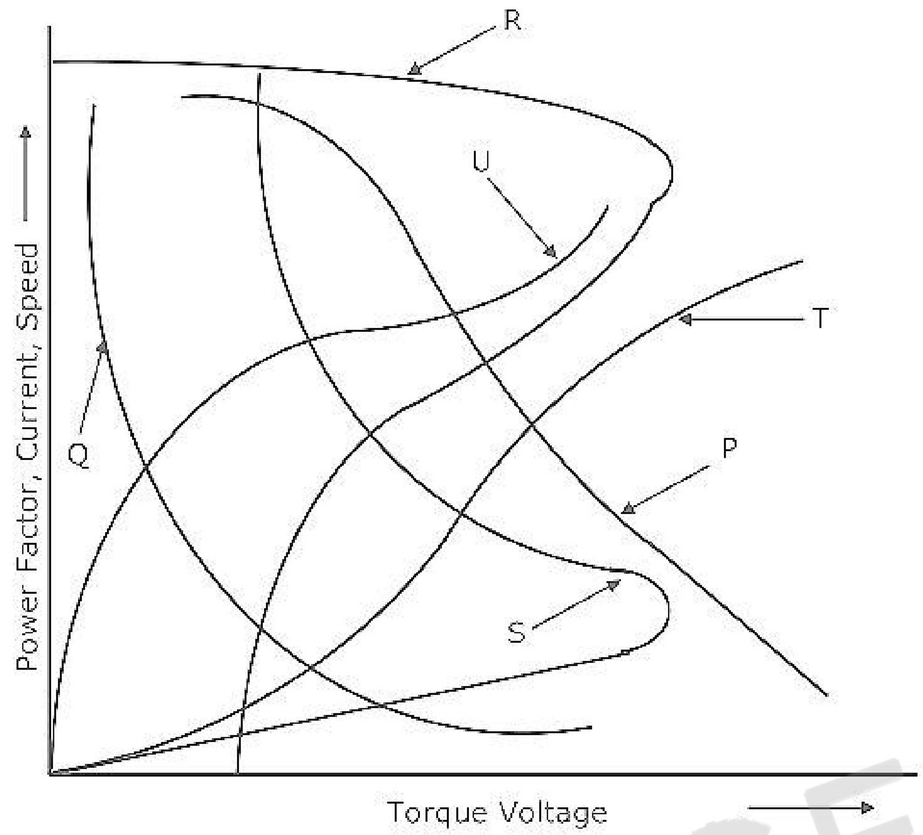


(a) Speed torque characteristics of Induction machine under motor-ing operation.

(b) Current torque characteristics of a dc series motor

(c) Power factor variation with voltage of an induction motor under no-load operation.

(d) Speed torque characteristics of induction machine under dc injection dynamic braking operation.

(e) Speed torque characteristics of dc series motor.

3.3

| Type of Relay | Most suited for |
|---|---|
| (A) Buchholz relay | (P) Feeder |
| (B) Translay relay | (Q) Transformer |
| (C) Carrier current, phase comparison relay | (R) Radial distributed |
| (D) Directional over current relay | (S) Generator |
| (E) Negative sequence relay | (T) Ring main distributor |
| | (U) Long overhead transmission line |

ZOLLEGE.in

3.4

| Type of bridge | Application |
|---|---|
| (A) Wien bridge | (P) Measurement of resistance |
| (B) Maxwell bridge | (Q) High Q inductors |
| (C) Scherring bridge | (R) Measurement of frequency |
| (D) Anderson bridge | (S) High voltage capacitors |
| (E) Blumleim bridge | (T) Low Q inductors |
| | (U) Insensitive to stray electrostatic fields |

3.5 Output wave forms:

(a)

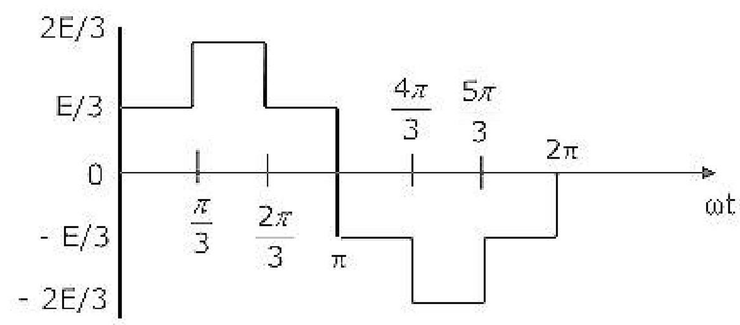


(b)

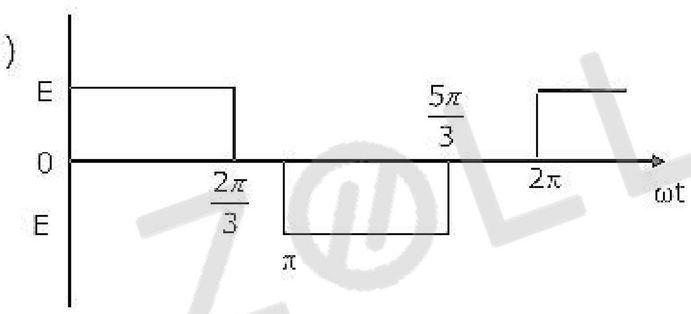


(c)

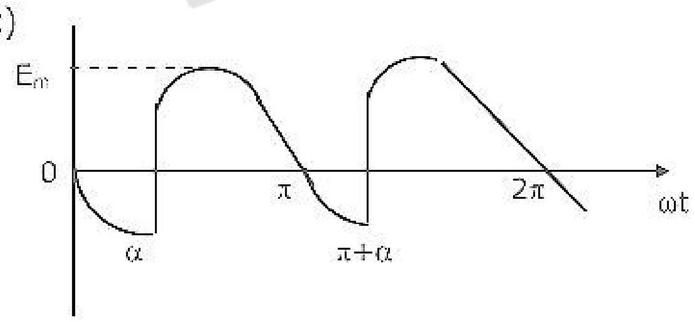


(d)

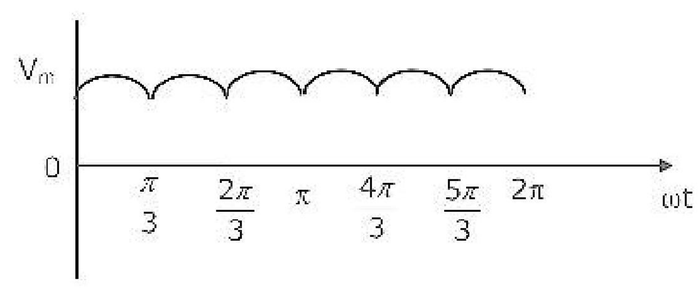


(e)

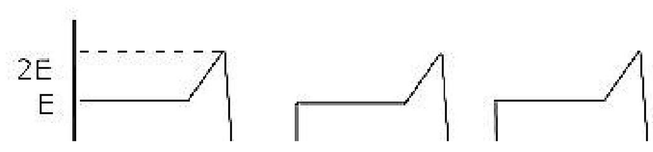


(P) single phase fully controlled ac-dc converter

(Q) Voltage commutated dc-ac chopper (E = input dc voltage)

(R) Phase voltage of a star connected balanced three-phase load fed from a three-phase inverter with 180° conduction. (input dc voltage=E)

(S) Line voltage of a six stepped inverter with input dc voltage E

(T) Three-phase diode bridge rectifier.

ZOLLEGE.in

4. For the circuit shown in figure, find the current through the resistance R connected between points *a* and *b* by Thevenin's theorem.

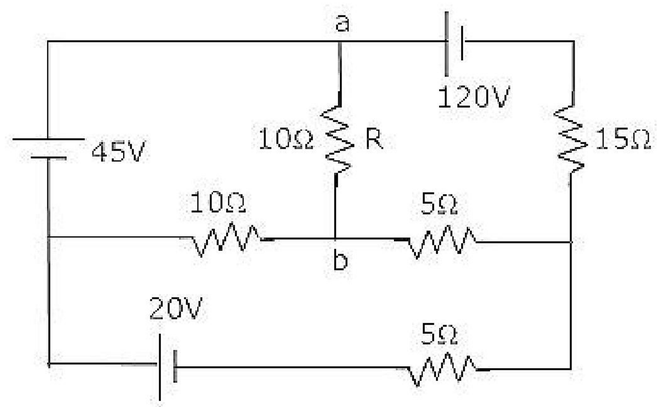


5. A 4 kVA, 50 Hz, single-phase transformer has a ratio 200/400V. The data taken on the l.v. side at the rated voltage show that the open circuit input wattage is 80 W. The mutual inductance between the primary and the secondary windings is 1.91H. What value will be the current taken by the transformer, if the no-load test is conducted on the h.v. side at rated voltage? Neglect the effect of widning resistance and leakage reactances.

6. Two identical three-phase transmission lines are connected in parallel to supply a total load of 100 MW at 132 kV and 0.8 p.f. lagging at the receiving end. The ABCD constants of each transmission lien are as follows:

$A = D = 0.98\angle 1°$; $B = 100\angle 75°$ Ohms per phase; $C = 0.0005\angle 90°$ Siemens per phase.

Determine (a) the ABCD constants of the combined network.

(B) the sending end power factor.

7. The min-terms of a four variable Boolean function Y is given by

$$Y = \bar{a}b\bar{c}\bar{d} + ab\bar{c}\bar{d} + \bar{a}\bar{b}\bar{c}d + \bar{a}\bar{b}c\bar{d} + \bar{a}\bar{b}c\bar{d}$$

Use Karnaugh map to minimize the function Y. Realize function Y employing only three-input NAND gates.

8. A set three linear equations with unknowns X, Y and Z is shown below.

$$\begin{bmatrix} 0 & 21.432 & 34.432 \\ 17.587 & -1.348 & -1.865 \\ 0 & -2.663 & -1.803 \end{bmatrix} \begin{bmatrix} X \\ Y \\ Z \end{bmatrix} \begin{bmatrix} 56.042 \\ 02.631 \\ 05.952 \end{bmatrix}$$

Decompose the coefficient matrix into an upper triangular matrix and then solve for the unknowns, X, Y and Z.

ZOLLEGE.in

## SECTION – B

Answer any TEN questions from this section.

9. The characteristic equation for a certain feedback control system is given by

$$s^4 + 20s^3 + 15s^2 + 2s + K = 0$$

(i) Find the range of K for stability.

(ii) What is the frequency in rad/sec at which the system will oscillate?

(iii) How many roots of the characteristic equation lie in the right half of the s-plane for K = 5?

10. In the network system shown in figure, find the current through $Z_3$ using nodal method. The values of voltages are given in volts and the impedances are given in ohms.

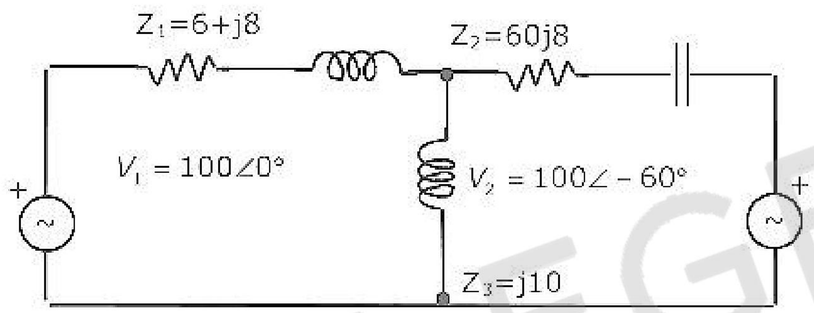


11. The state equation of a linear time-invariant system is given by

$$\begin{bmatrix} x_1(t) \\ x_2(t) \end{bmatrix} = \begin{bmatrix} 0 & 1 \\ -1 & -2 \end{bmatrix} \begin{bmatrix} x_1(t) \\ x_2(t) \end{bmatrix} + \begin{bmatrix} 0 \\ 1 \end{bmatrix} r(t)$$

(i) Find state transition $\phi(f)$ and the characteristic equation of the system.

(ii) Determine the state vector $x_2(t)$ for $t = 0$ when $r(t) = U(t)$. Assume values of states initially to be zero.

12. The block diagram of control system is given in figure.

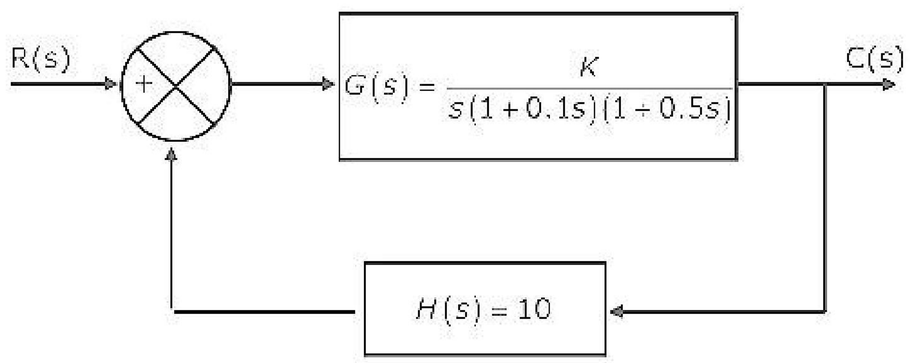


(i) Sketch the Nyquist locus for $0 < \omega < \infty$

(ii) Find gain margin and phase cross over frequency

ZOLLEGE.in

13. A steady current I flows through a long cylindrical wire of radius R. find the magnetic vector potential at any point outside the conductor at radius. Vector potential on the surface of the conductor may be taken to be equal to zero.

14. Figure below, shows the details of an electromagnet with an operating coil rated for 230V, 50 Hz. The coil has 1500 turns. Find the average force of attraction on the armature of the electromagnet and the current drawn by the coil. Omit winding resistance and core losses and assume infinite permeability for the core.

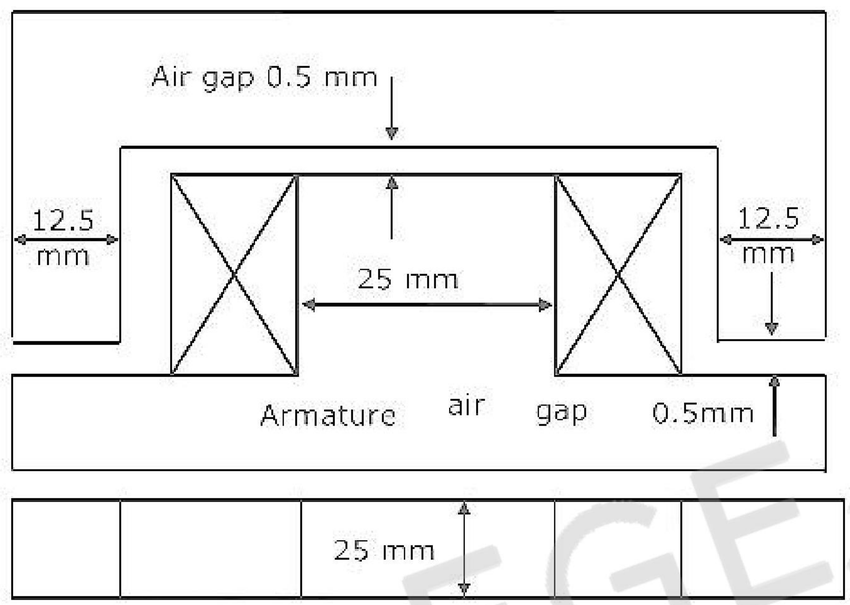


15. A 220V, 1.5 kW, 859 rpm, separately excited dc motor has armature resistance of 2.5 ohms and it draws a current of 8A at rated-load condition. If the field current and the armature voltage are fixed at the value of rated speed at rated load, what will be the no-load speed of the motor? Assume losses remain constant between no-load and full load operation.

16. A three-phase, 50 Hz, 415 V, synchronous machine operates at rated voltage and at a leading power factor of 0.9. Shaft power is 15 kW and the excitation emf is 400V. If per phase resistance is 0.5 ohm, find the synchronous reactance. Neglect mechanical losses of the system.

17. In a string of three identical suspension insulator units supporting a transmission line conductor, if the self capacitance of each unit is denoted as C Farads, the capacitance of each connector pin to ground can be taken as 0.1 C Farads. Determine the voltage distribution across the string if the maximum permissible voltage per unit is given as 20kV. Also determine the string efficiency.

18. A three-phase delta-wye connected 30 MVA, 33 kV/11 kV transformers is protected by a simple differential relaying scheme. The ct ratio on the primary side is 500 :5 and that on the secondary side is 2000:5. Sketch the ct connection diagram for the relaying scheme. Also calculate the relay current setting for faults drawing upto 200% of the rated current.

ZOLLEGE.in

19. A loss-free alternator supplies 50 MW to an infinite bus, the steady state stability limit being 100 MW. Determine if the alternator will remain stable if the input to the prime mover of the alternator is abruptly increased by 40 MW.

20. A three phase star-connected alternator is rated 30 MVA, 13.8 kV and has the following sequence reactance values:

$X_1 = 0.25 p.u; X_2 = 0.35 p.u$ and $X_0 = 0.10 p.u$

The neutral of the alternator is solidly grounded. Determine the alternator line currents when a double line-to-ground fault occurs on its terminals. Assume that the alternator is unloaded and is operating at rated voltage when the fault occurs.

21. For the circuit shown in figure, determine $\frac{V_0(s)}{V_i(s)}$ and hence write the equations for the magnitude and phase response of $\frac{V_0}{V_i}$. If the value of $R_1$ is 100k Ohm and of R is 10 k Ohm, determine the value of C to obtain a phase shift to 270° between $V_0$ and $V_i$ for an input frequency of 1000 rad/s.

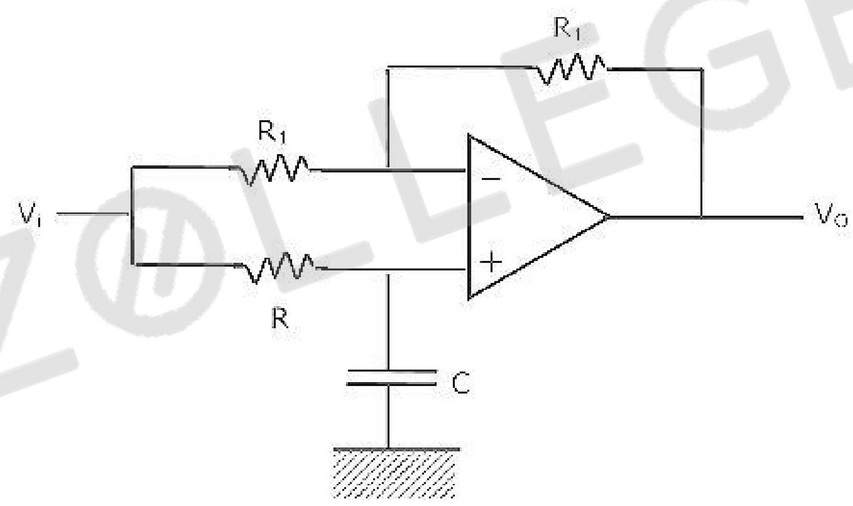


22. A subroutine PROG1 written in the 8085 assembly language is given below. At entry to this program, the values of different registers in HEX are A = 05; BC = 0000; DE = 5472; HL = 4528. All the flags are set to 1. determine the register contents and condition of the zero and carry flags after the execution of the program. (i.e., after executing RET statement). What does the program accomplish?

```
PROG1    MOV A, E
         ADD L
         DAA
         MOV L, A
         MOV A, D
         ADC H
         DAA
```

ZOLLEGE.in

```
MVI A, 00H
RAL
RET
```

23. For the circuit shown in figure, determine the input impedance Z. assume the op-amp to be an ideal one.

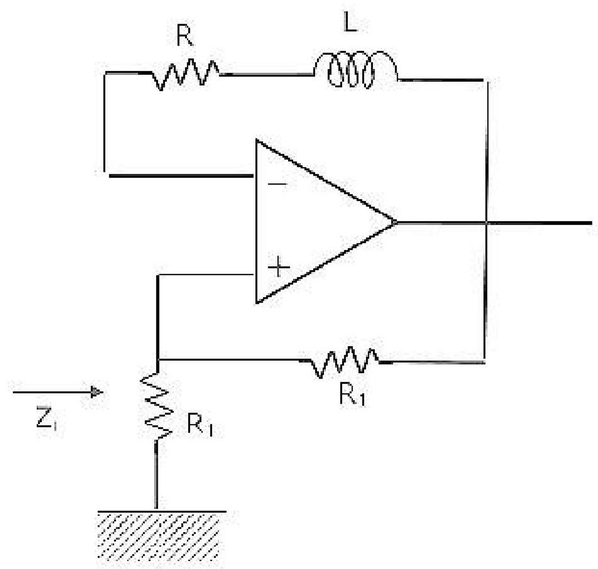


24. A symmetrical star connected three-phase load is made of three identical coils having an internal resistance of 12 Ohm and inductance of 142 mH. The power taken by this load when connected to a balanced three-phase three-wire supply of 400V, 50 Hz is measured using the two wattmeter method. The watt meters used are similar and are of type of 400V, 5A, UPF, class 1 accuracy.

(i) Determine expected readings in W1, W2.

(ii) Compute the total power and

(iii) the possible worst case error in W1, W2 and the total power.

25. For an M × N matrix [A], it is desired to print from each row of matrix, the element having the largest absolute magnitude in that particular row. Draw a suitable flow chart (for a computer program) to perform such a task.

26. Consider the thyristor circuit of figure. The thyristor is given a triggering pulse after every 10 ms. calculate the duration for which the thyristor remains ON after each triggering pulse. Assume ideal devices and explain briefly the basis.

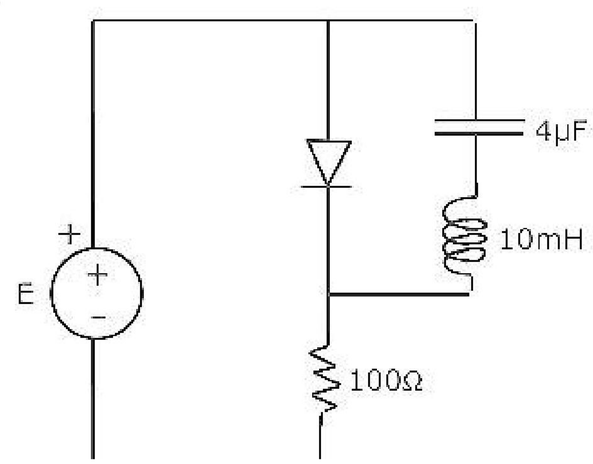


ZOLLEGE.in

27. The single phase half controlled ac to dc bridge converter of figure supplies a 10 Ohm resistor in series with a 100 V back emf load. The firing angle of the thyristors is set to 60°.

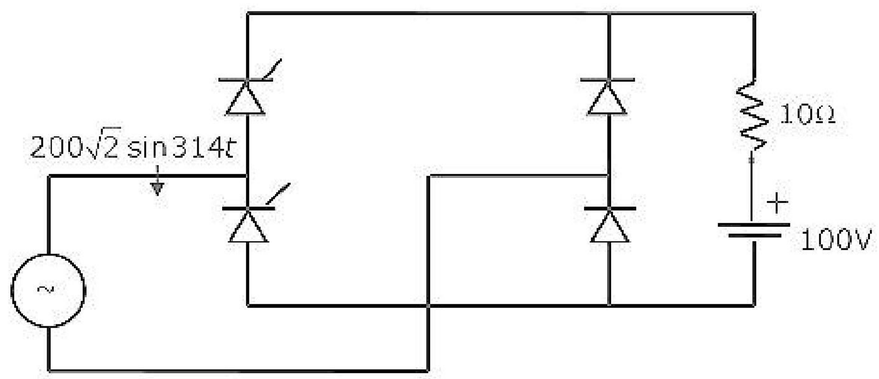


(i) Find the average current through the resistor.

(ii) What will be the new average current through the resistor, if a very large inductor is connected in series with the load?

28. A 50 Hz, 440 V, three-phase, 4-pole induction motor develops half the rated torque at 1490 rpm. With the applied voltage magnitude remaining at the rated value. What should be its frequency if the motor has to develop the same torque at 1600 rpm? Neglect stator and rotor winding resistances, leakage reactances and iron losses.

ZOLLEGE.in