## SECTION - A

1. This question consists of TWENTY-FIVE sub-questions (1.1 – 1.25) of ONE mark each. For each of these sub-questions, four possible alternatives (A,B, C and D) are given, out of which ONLY ONE is correct. Indicate the correct answers in the boxes corresponding to the questions only on the FIRST sheet of the answer book.

1.1 Identify which of the following is NOT a true of the graph shown in Fig.P1.1

(a) begh

(b) defg

(c) adfg

(d) aegh

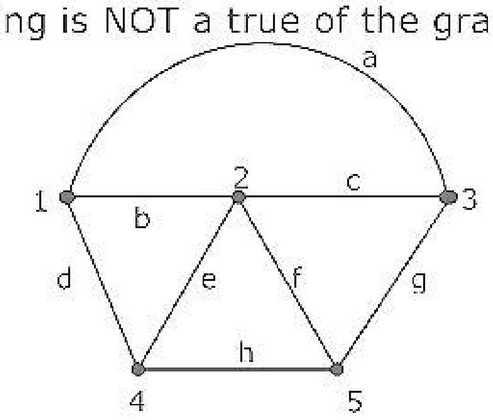


1.2 The z-transform F(z) of the function $f(nT) = a^{nT}$ is

(a) $\frac{z}{z-a^{T}}$ (b) $\frac{z}{z+a^{T}}$ (c) $\frac{z}{z-a^{-T}}$ (d) $\frac{z}{z+a^{-T}}$

1.3 If $\left[f(t)\right] = F(s)$, then $\left[f(t-T)\right]$ is equal to

(a) $e^{sT}F(s)$ (b) $e^{-sT}F(s)$ (c) $\frac{F(s)}{1+e^{sT}}$ (d) $\frac{F(s)}{1-e^{-sT}}$

1.4 A 2-port network is shown in Fig.P1.4. the parameter $h_{21}$ for this network can be given by

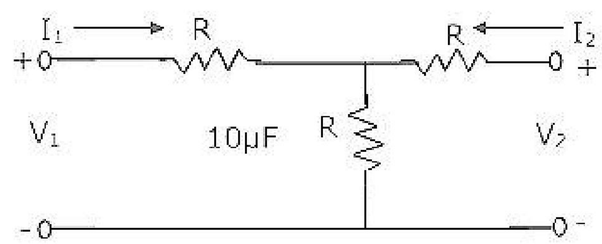


(a) $-\frac{1}{2}$ (b) $+\frac{1}{2}$ (c) $-\frac{3}{2}$ (d) $+\frac{3}{2}$

1.5 The early effect in a bipolar junction transistor is caused by

(a) fast turn-on

(b) fast turn-off

(c) large collector-base reverse bias

(d) large emitter-base forward bias

ZOLLEGE.in

1.6 The first dominant pole encountered in the frequency response of a compensated op-amp is approximately at

(a) 5 Hz (b) 10 kHz (c) 1 MHz (d) 100 MHz

1.7 Negative feedback in an amplifier

(a) reduces gain

(b) increases frequency and phase distortions

(c) reduces bandwidth

(d) increase noise

1.8 In the cascade amplifier shown in Fig.P1.8, if the common-emitter stage($Q_1$) has a transconductance $g_{m1}$, and the common base stage ($Q_2$) has a transconductance $g_{m2}$, then the overall transconductance $g = \left(\frac{i_o}{v_i}\right)$ of the cascade amplifier is

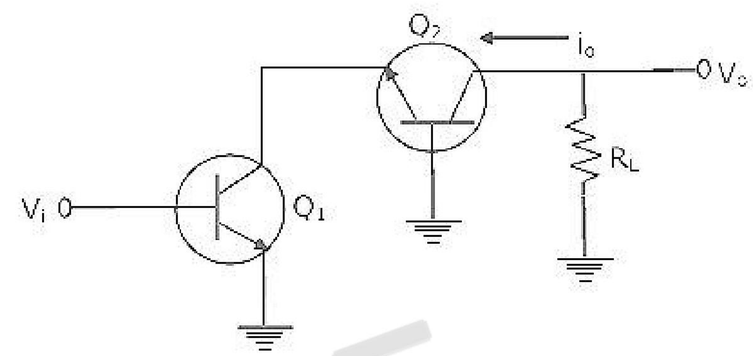


(a) $g_{m1}$ (b) $g_{m2}$ (c) $\frac{g_{m1}}{2}$ (d) $\frac{g_{m2}}{2}$

1.9 Crossover distortion behaviour is characteristic of

(a) Class A output stage (b) Class B output stage

(c) Class AB output stage (d) Common-base output stage

1.10 The logical expression $y = A + \bar{A}B$ is equivalent to

(a) $y = AB$ (b) $y = \bar{A}B$ (c) $y = \bar{A} + B$ (d) $y = A + B$

1.11 A Darlington emitter-follower circuit is sometimes used in the output stage of a TTL gate in order to

(a) increase its $I_{OL}$ (b) reduces its $I_{OH}$

(c) increases its speed of operation (d) reduce power dissipation

1.12 Commercially available ECL gears use two ground lines and one negative supply in order to

(a) reduce power dissipation

(b) increase fan-out

(c) reduce loading effect

(d) eliminate the effect of power line glitches or the biasing circuit

ZOLLEGE.in

1.13 The resolution of a 4-bit counting ADC is 0.5 volts. For an analog input of 6.6 volts, the digital output of the ADC will be

(a) 1011 (b) 1101 (c) 1100 (d) 1110

1.14 For a second-order system with the closed-loop transfer function

$$T(s) = \frac{9}{s^2 + 4s + 9}$$

The settling time for 2-percent band, in seconds, is

(a) 1.5 (b) 2.0 (c) 3.0 (d) 4.0

1.15 The gain margin (in dB) of a system having the loop transfer function

$$G(s)H(s) = \frac{\sqrt{2}}{s(s+1)} \text{ is}$$

(a) 0 (b) 3 (c) 6 (d) $\infty$

1.16 The system mode described by the state equations

$$X = \begin{bmatrix} 0 & 1 \\ 2 & -3 \end{bmatrix} x + \begin{bmatrix} 0 \\ 1 \end{bmatrix} u$$

$$y = \begin{bmatrix} 1 & 1 \end{bmatrix} x$$

is:

(a) controllable and observable
(b) controllable, but not observable
(c) observable, but not controllable
(d) neither controllable nor observable

1.17 The phase margin (in degrees) of a system having the loop transfer function

$$G(s)H(s) = \frac{2\sqrt{3}}{s(s+1)} \text{ is}$$

(a) 45° (b) -30° (c) 60° (d) 30°

1.18 A signal x(t) has a Fourier transform X(ω). If x(t) is a real and odd fucntion of t, then X(ω) is

(a) a real and even function of ω
(b) a imaginary and odd function of ω
(c) an imaginary and even function of ω
(d) a real and odd function of ω

ZOLLEGE.in

1.19. The input to a channel is a bandpass signal. It is obtained by linearly modulating a sinusoidal carrier with a single-tone signal. The output of the channel due to this input is given by

$$y(t) = \left(\frac{1}{100}\right)\cos\left(100t - 10^{-6}\right)\cos\left(10^{6}t - 1.56\right)$$

The group delay $(t_g)$ and the phase delay $(t_p)$ in seconds, of the channel are

(a) $t_g = 10^{6}, t_p = 1.56$

(b) $t_g = 1.56, t_p = 10^{6}$

(c) $t_g = 10^{8}, t_p = 1.56 \times 10^{6}$

(d) $t_g = 10^{8}, t_p = 1.56$

1.20. A modulated signal is given by, $s(t) = m_1(t)\cos(2\pi f_c t) + m_2(t)\sin(2\pi f_c t)$ where the baseband signal $m_1(t)$ and $m_2(t)$ have bandwidths of 10 kHz and 15 kHz, respectively. The bandwidth of the modulated signal, in kHz, is

(a) 10 (b) 15 (c) 25 (d) 30

1.21. A modulated signal is given by $s(t) = e^{-at}\cos\left[(\omega_c + \Delta\omega)t\right]u(t)$, where a, $\omega_c$ and $\Delta\omega$ are positive constants, and $\omega_c \quad \Delta\omega$.

The complex envelope of s(t) is given by

(a) $\exp(-at)\exp\left[j(\omega_c + \Delta\omega)t\right]u(t)$

(b) $\exp(-at)\exp(j\Delta\omega t)u(t)$

(c) $\exp\left[j\Delta\omega t\right].u(t)$

(d) $\exp\left[(j\omega_c + \Delta\omega)t\right]$

1.22. An electric field on a plane is described by its potential $V = 20\left(r^{1} + r^{2}\right)$ where r is the distance from the source. The field is due to

(a) a monopole

(b) a dipole

(c) both a monopole and a dipole

(d) a quadrupole

1.23. Assuming perfect conductors of a transmission line, pure TEM propagation is NOT possible in

(a) coaxial cable

(b) air-filled cylindrical wave guide

(c) parallel twin-wire line in air

(d) semi-infinite parallel plate wave guide

1.24. Indicate which one of the following will NOT exist in a rectangular resonant cavity.

(a) $TE_{110}$ (b) $TE_{011}$ (c) $TM_{110}$ (d) $TM_{111}$

ZOLLEGE.in

1.25 Identify which one of the following will NOT satisfy the wave equation.

(a) $50e^{j(\omega t-3z)}$ (b) $\sin\left[\omega(10z+5t)\right]$ (c) $\cos\left(y^2+5t\right)$ (d) $\sin(x)\cos(t)$

**2.** This question consists of TWENTY-FIVE sub-questions (2.1 – 2.25) of ONE mark each. For each of these sub-questions, four possible alternatives (A, B, C and D) are given, out of which ONLY ONE is correct. Indicate the correct answers in the boxes corresponding to the questions only on the SECOND sheet of the answer book.

2.1 The Fourier series representation of an impulses train denoted by

$s(t)=\sum_{n=-\infty}^{\infty} d(t-nT_0)$ is given by

(a) $\frac{1}{T_0}\sum_{n=-\infty}^{\infty}\exp-\frac{j2\pi nt}{T_0}$ (b) $\frac{1}{T_0}\sum_{n=-\infty}^{\infty}\exp-\frac{j\pi nt}{T_0}$

(c) $\frac{1}{T_0}\sum_{n=-\infty}^{\infty}\exp\frac{j\pi nt}{T_0}$ (d) $\frac{1}{T_0}\sum_{n=-\infty}^{\infty}\exp\frac{j2\pi nt}{T_0}$

2.2. The Thevenin equivalent voltage $V_{TH}$ appearing between the terminals A and B of the network shown in Fig.P2.2 is given by

(a) j16(3-j4)
(b) j16(3+j4)
(c) 16(3+j4)
(d) 16(3-j4)

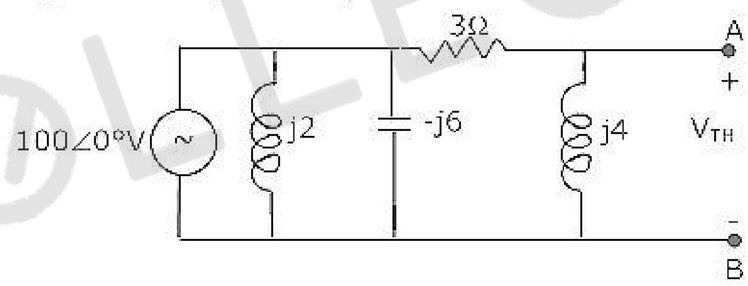


2.3. The value of R (in ohms) required for maximum power transfer in the network shown in Fig.P2.3 is

(a) 2
(b) 4
(c) 8
(d) 10

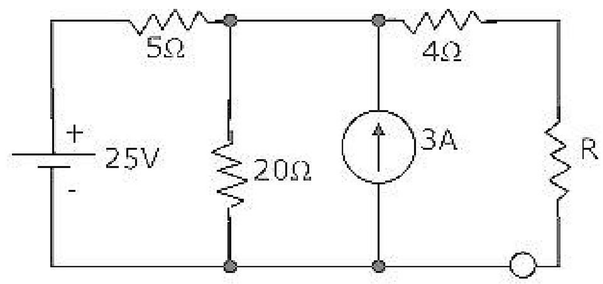


2.4. A Delta-connected network with its Wye-equivalent is shown in Fig.P2.4. The resistance $R_1$, $R_2$ and $R_3$ (in ohms) are respectively

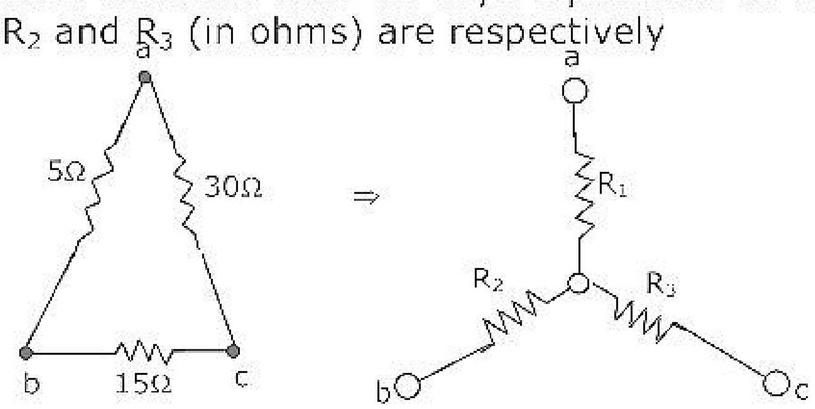


ZOLLEGE.in

(a) 1.5, 3 and 9 (b) 3, 9 and 1.5
(c) 9, 3 and 1.5 (d) 3, 1.5 and 9

2.5. An n-channel JEFT has $I_{DSS} = 2mA$ and $V_p = -4V$. Its transconductance $g_m$ (in milliohm) for an applied gate-to-source voltage $V_{GS}$ of −2V is:

(a) 0.25 (b) 0.5 (c) 0.75 (d) 1.0

2.6. An npn transistor (with C=0.3 pF) has a unity – gain cutoff frequency $f_T$ of 400 MHz at a dc bias current $I_c = 1mA$. The value of its $C_\mu$ (in pF) is approximately $(V_T = 26mV)$

(a) 15 (b) 30 (c) 50 (d) 96

2.7. An amplifier has an open-loop gain of 100, an input impedance of 1 kΩ, and an output impedance of 100Ω. A feedback network with a feedback factor of 0.99 is connected to the amplifier in a voltage series feedback mode. The new input and output impedances, respectively, are

(a) 10Ω and 1Ω (b) 10Ω and 10 kΩ
(c) 100Ω and 1Ω (d) 10kΩ and 1 kΩ

2.8. A dc power supply has a no-load voltage of 30V, and a full-load voltage of 25 V at a full-load current of 1A. Its output resistance and load regulation, respectively are

(a) 5Ω and 20% (b) 25Ω and 20%
(c) 5Ω and 16.7% (d) 25Ω and 16.7%

2.9. An amplifier is assumed to have a single pole high frequency transfer function. The rise time of its output response to a step function input is 35 nsec. The upper −3 dB frequency (in MHz) for the amplifier to a sinusoidal input is approximately at

(a) 4.55 (b) 10 (c) 20 (d) 28.6

2.10. The minimized form of the logical expression $\left(\bar{A}\,\bar{B}\,\bar{C} + \bar{A}B\bar{C} + \bar{A}BC + AB\bar{C}\right)$ is

(a) $\bar{A}\,\bar{C} + B\bar{C} + \bar{A}B$ (b) $A\bar{C} + \bar{B}C + \bar{A}B$
(c) $\bar{A}C + \bar{B}C + \bar{A}B$ (d) $A\bar{C} + \bar{B}C + A\bar{B}$

2.11. For a binary half-sub-tractor having two inputs A and B, the correct set of logical expressions for the outputs D (=A minus B) and X (=borrow) are

(a) $D = AB + \bar{A}B, X = \bar{A}B$ (b) $D = \bar{A}B + A\bar{B} + A\bar{B}, X = A\bar{B}$
(c) $D = \bar{A}B + A\bar{B}, X = \bar{A}B$ (d) $D = AB + \bar{A}\bar{B}, X = A\bar{B}$

ZOLLEGE.in

2.12. The ripple counter shown in Fig.P2.12 works as a

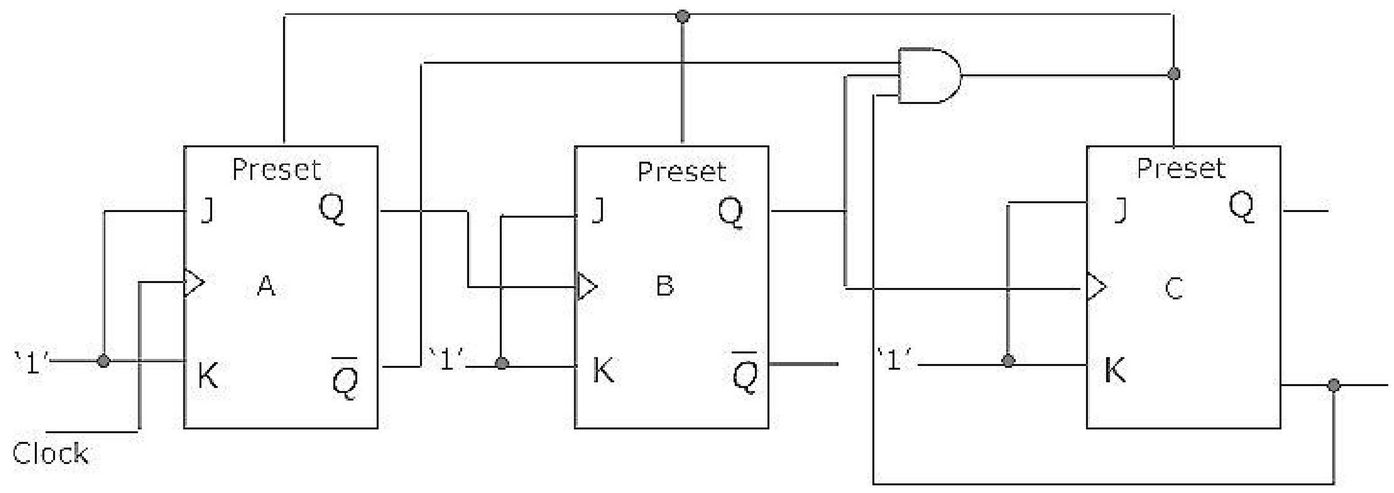


(a) mod – 3 up counter
(b) mod – 5 up counter
(c) mod – 3 down counter
(d) mod – 5 down counter

2.13. If CS = $A_{15}A_{14}A_{13}$ is used as the chip select logic of a 4 K RAM in an 8085 system, then its memory range will be

(a) 3000 H – 3 FFF H
(b) 7000 H – 7 FFF H
(c) 5000 H – 5 FFF H and 6000 H – 6 FFF H
(d) 6000 H – 6 FFF H and 7000 H – 7 FFF H

2.14. If the closed loop transfer function T(s) of a unity negative feedback system is given by

$$T(s) = \frac{a_{n-1}s + a_n}{s^n + a_1 s^{n-1} + \ldots + a_{n-1}s + a_n}$$

then the steady state error for a unit ramp input is

(a) $\frac{a_n}{a_{n-1}}$
(b) $\frac{a_n}{a_{n-2}}$
(c) $\frac{a_{n-2}}{a_{n-2}}$
(d) zero

2.15. Consider the points $s_1 = -3 + j4$ and $s_2 = -3 - j2$ in the s-plane. Then, for a system with the open loop transfer function

$$G(s)H(s) = \frac{K}{(s+1)^4}$$

(a) $s_1$ is on the root locus, but not $s_2$
(b) $s_2$ is on the root locus, but not $s_1$
(c) both $s_1$ and $s_2$ are on the root locus
(d) neither $s_1$ nor $s_2$ is on the root locus

ZOLLEGE.in

2.16. For the system described by the state equation

$$x = \begin{bmatrix} 0 & 1 & 0 \\ 0 & 0 & 1 \\ 0.5 & 1 & 2 \end{bmatrix} x + \begin{bmatrix} 0 \\ 0 \\ 1 \end{bmatrix} u$$

If the control signal u is given by $u = \left[-0.5 - 3 - 5\right] x + v$, then the eigen values of the closed-loop system will be

(a) 0, -1, -2 (b) 0, -1, -3 (c) -1, -1, -2 (d) 0, -1, -1

2.17. The z-transform of a signal is given by $C(z) = \dfrac{1z^{-1}\left(1 - z^{-4}\right)}{4\left(1 - z^{-1}\right)^2}$. Its final value is

(a) $\frac{1}{4}$ (b) zero (c) 1.0 (d) infinity

2.18. The Nyquist sampling frequency (in Hz) of a signal given by $6 \times 10^4 \sin c^2(400t) * 10^6 \sin c^3(100t)$ is

(a) 200 (b) 300 (c) 500 (d) 1000

2.19. The peak-to-peak input to an 8-bit PCM coder is 2 volts. The signal power-to-quantization noise power ratio (in dB) for an input of $0.5\cos(\omega_m t)$ is

(a) 47.8 (b) 49.8 (c) 95.6 (d) 99.6

2.20. The input to a matched filter is given by

$$s(t) = \begin{cases} 10\sin\left(2\pi \times 10^6 t\right) & 0 < 1 < 10^{-4} \text{ sec} \\ 0 & \text{otherwise} \end{cases}$$

The peak amplitude of the filter output is

(a) 10 volts (b) 5 volts

(c) 10 millivolts (d) 5 millivolts

2.21. Four independent messages have bandwidths of 100 Hz, 200 Hz and 400 Hz, respectively. Each is sampled at the Nyquist rate, and the samples are time division multiplexed (TDM) and transmitted. The transmitted sample rate (in Hz) is

(a) 1600 (b) 800 (c) 400 (d) 200

2.22. In a twin-wire transmission line in air, the adjacent voltage maxima are at 12.5 cm and 27.5 cm. The operating frequency is

(a) 300 MHz (b) 1 GHz (c) 2 GHz (d) 6.28 GHz

ZOLLEGE.in

2.23. A transmitting antenna radiates 251 W isotropically. A receiving antenna, located 100 m away from the transmitting antenna, has an effective aperture of 500 $cm^2$. The total received by the antenna is

(a) 10μW (b) 1 μW (c) 20 μW (d) 100 μW

2.24. In air, a lossless transmission line of length 50 cm with L = 10 μH/m, C = 40 pF/m is operated at 25 MHz. Its electrical path length is

(a) 0.5 meters (b) λ meters

(c) $\frac{\pi}{2}$ radians (d) 180 degrees

2.25. A plane wave propagating through a medium $[\varepsilon_r = 8, \nu_r = 2,$ and $\sigma = 0]$ has its electric field given by $\bar{E} = 0.5\hat{X}e^{-\left(\frac{z}{3}\right)}\sin\left(10^8 t - \beta z\right) V/m$. The wave impedance, in ohmsis

(a) 377 (b) 198.5∠180° (c) 182.9∠14° (d) 133.3

## SECTION – B

This section consists of TWENTY questions of FIVE marks each. ANY FIFTEEN out of them have to be answered. If more number of questions are attempted, score off the answers not be evaluated, else, only the first fifteen unscored answers will be considered.

3. In the circuit of Fig.P3, the switch 'S' has remained open for a long time. The switch closes instantaneously at t = 0

(a) Find $V_o$ for $t \le 0$ and as $t \to \infty$

(b) Write an expression for $V_o$ as function of time for $0 \le t \le \infty$

(c) Evaluate $V_o$ at t = 25 μsec.

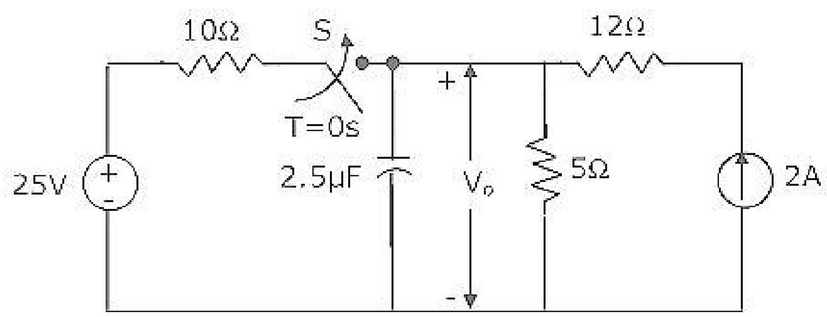


4. For the network shown in Fig.P4, evaluate the current I flowing through the 2Ω resistor using superposition theorem.

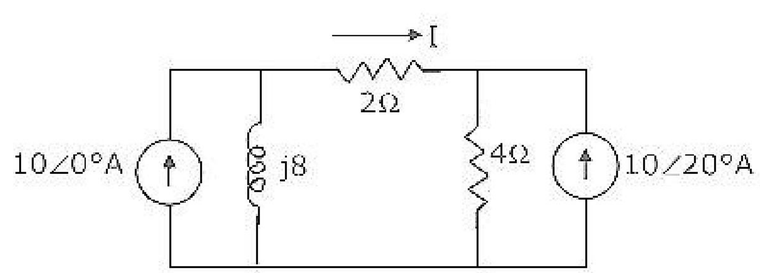


ZOLLEGE.in

5. A coil with a quality factor (Q) of 10 is put in series with a capacitor $C_1$ of 10 μF, and the combination is found to draw maximum current when a sinusoidal voltage of frequency 50 Hz is applied. A second capacitor $C_2$ is now in parallel with the circuit. What should be the capacitance of $C_2$ for combined circuit to act purely as a resistance for a sinusoidal excitation at a frequency of 100Hz? Calculate the rms current drawn by the combined circuit at 100 Hz if the applied voltage is 100 V (rms).

6. A bipolar junction transistor amplifier circuit shown in Fig.P6. Assume that the current source $I_{bias}$ is ideal, and the transistor has vary large b, $r_b = 0$, and $r_0 \to \infty$. Determined the ac small-signal midband voltage gain $\left(\frac{V_o}{V_s}\right)$, input resistance $(R_i)$ and output resistance $(R_u)$ of the circuit. Assume $V_T = 26mV$

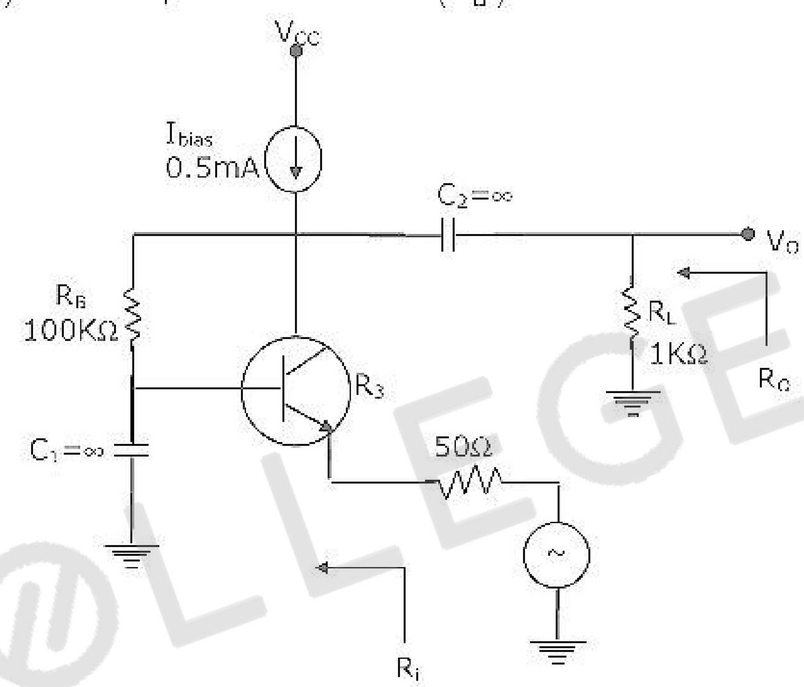


7. A JFET having μ=50 and $r_d = 10k\Omega$ is used in a common-source configuration as shown in Fig.P7. The JFET capacitances are $C_{gs} = 5pF, C_{gd} = 2pF$, and $C_{ds} = 2pF$. Determine the ac small signal midband voltage gain $\left(\frac{V_o}{V_s}\right)$ and the upper −3dB frequency of the circuit.

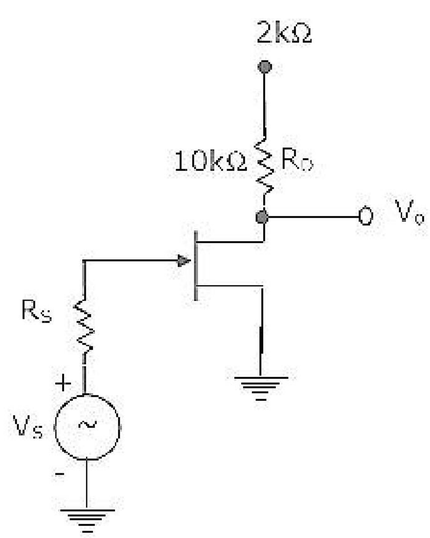


ZOLLEGE.in

8. Neatly sketch and label the dc transfer characteristic $(i.e., V_o \text{ vs. } V_{in})$ of the circuit shown in Fig.P8, as $V_{in}$ varies from −2V to +2V. Assume ideal op-amp, and the diodes have a forward voltage of 0.6 V and zero incremental resistance.

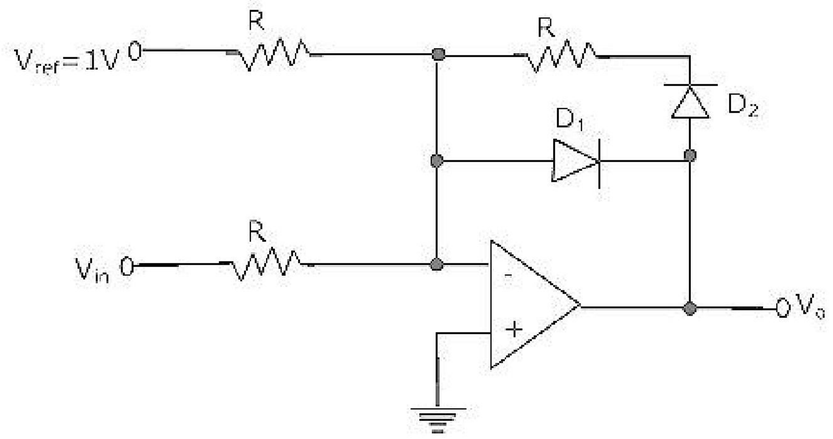


9. A transistor LC oscillator circuit is shown in Fig.P9. Assume that the transistor has very high β (so that you may neglect $r_d$). Derive an equation governing the circuit operation, and find the frequency of oscillation. Also, state the gain condition required for oscillation to start.

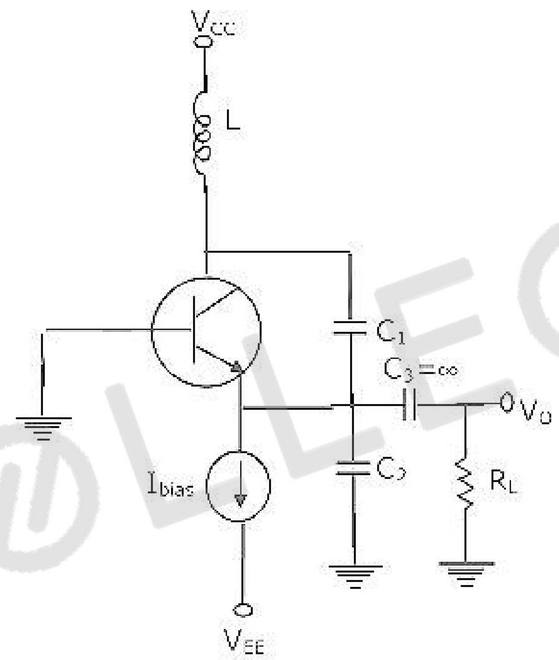


10. In the CMOS inverter circuit shown in Fig.P10, the input $V_i$ makes a transition from $V_{OL}(=0V)$ to $V_{OH}(=5V)$. Determine the high-to-low propagation delay time $(t_{pHL})$ when it is driving a capacitive load $(C_L)$ of 20 pF. Device data:

$$NMOS: V_{TN} = 1V; k_N = \mu_n C_{OX}\left(\frac{W}{L}\right)_n = 40\mu A/V^2, \lambda = 0,$$

$$PMOS: V_{TP} = -1V; k_p = \mu_p C_{OX}\left(\frac{W}{L}\right)_p = 20\mu A/V^2, \lambda = 0.$$

Neglect body effect.

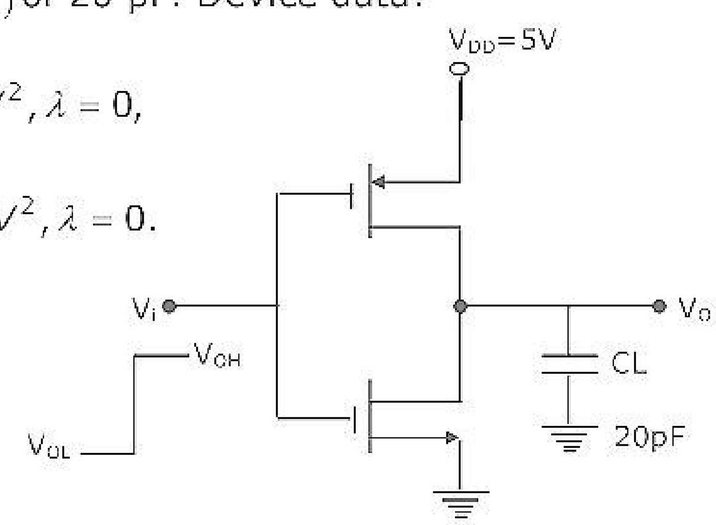


ZOLLEGE.in

11. The circuit diagram of a synchronous counter is shown in Fig.P.11. Determine the sequence of states of the counter assuming that the initial state is '000'. Give your answer in a tabulor form showing the present state $Q_{A(n)}, Q_{B(n)}, Q_{C(n)}$, $J-K$ inputs $(J_A, K_A, J_B, J_C, K)$ and the next state $Q_{A(n+1)}, Q_{B(n+1)}, Q_{C(n+1)}$. From the table, determine the modulus of the counter.

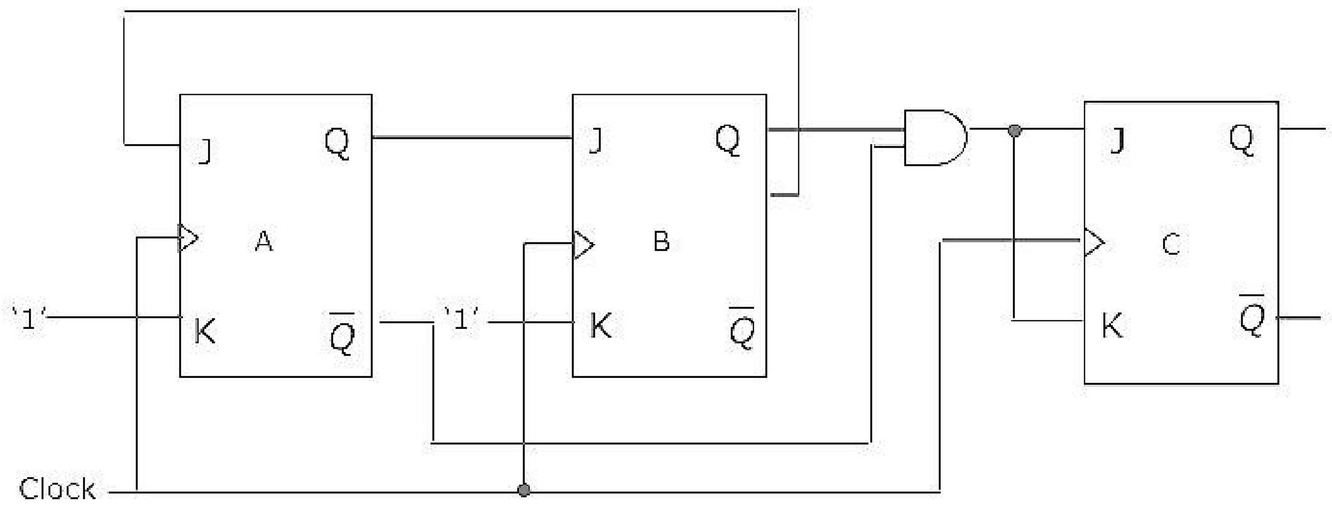


12. In a certain application, four inputs A, B, C, D (both true and complement forms available) are fed to logic circuit, producing an output F, which operates a relay. The relay turns on when F(ABCD) = 1 for the following states of the inputs (ABCD):'0000', '0010', '0101', '0110', '1101' and '1110'. States '1000' and '1001' do not occur, and for the remaining states, the relay is off. Minimize F with the help of a Karnaugh map and realize it using a minimum number of 3 – input NAND gates.

13. An 8085 assembly language program is given below:

```
        MVIC, 03H
        LXI H, 2000H
        MOV A, M
        DRC  C
LOOP:   INX  H
        MOV B, M,
        CMP B
        JNC LOOP2
        MOV A, B
LOOP2:  DCR C
        JNZ LOOP1
        STA 2100H
        HLT
```

ZOLLEGE.in

Contents of the memory locations 2000 H to 2002 H are:

2000 : 18 H  2001:10H,  2002:2 BH.

(a) What does the above program do?

(b) At the end of the program, what will be

(i) the contents of the registers A, B, C, H and L?

(ii) the condition of the carry and zero flags?

(iii) the contents of the memory locations 2000 H, 2001 H, 2002 H and 2100H.

14. The loop transfer function of a feedback control system is given by

$$G(s)H(s) = \frac{K(s+1)}{s(1+T_s)(1+2s)}, K > 0$$

Using Routh-Hurwitz criterion, determine the region of K-T plane in which the closed-loop system is stable.

15. The asymptotic Bode plot of the minimum phase open-loop transfer function G(s) H(s) in as shown in Fig.P15. Obtain the transfer function G(s)H(s)

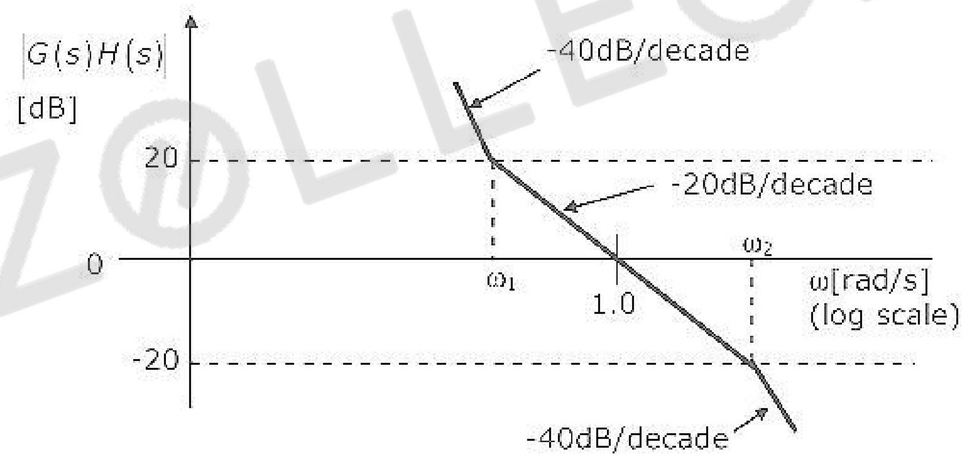


16. Consider a feedback system with the open-loop transfer function, given by

$$G(s)H(s) = \frac{K}{s(2s+1)}$$

Examine the stability of the closed loop system using Nyquist stability theory.

ZOLLEGE.in

17. A baseband signal m(t) modulates a carrier to produce the angle modulated signal, $A_c \cos\left[2\pi \times 10^8 t + k_p m(t)\right]$, where m(t) is shown in Fig.P17. Determine the value of $k_p$ so that the peak-to-peak frequency deviation of the carrier is 100 kHz.

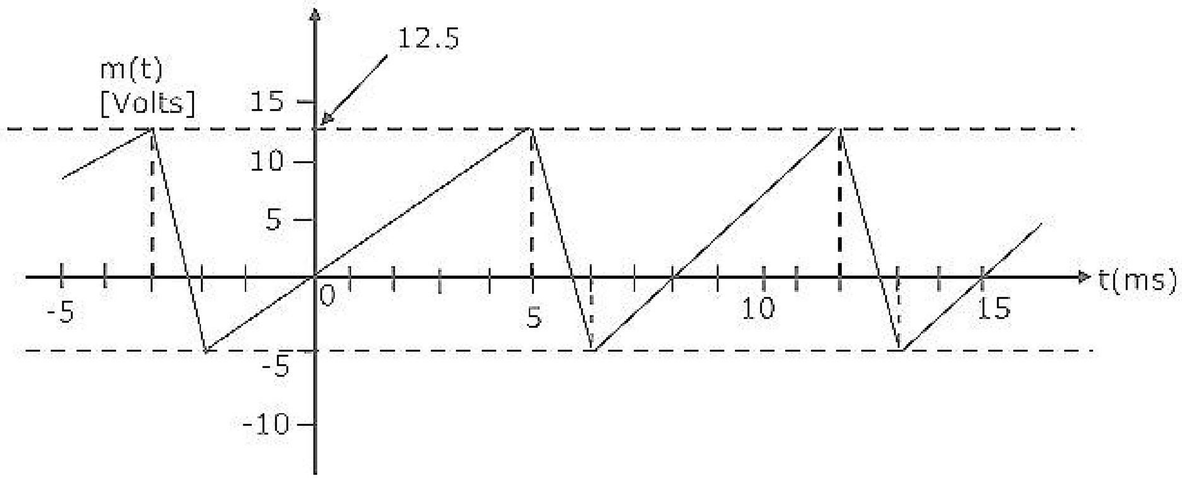


18. Input to a linear delta modulator is a sinusoidal signal whose frequency can vary from 200 Hz to 4000 Hz. The input is sampled at eight times the Nyquist rate. The peak amplitude of the sinusoidal signal is 1 volt.

(a) Determine the minimum value of the step size in order to avoid slope overload when the input signal frequency is 800 Hz.

(b) What is the peak amplitude of the input signal, to just overload the modulator, when the input signal frequency is 200 Hz?

(c) Is the modulator overloaded when the input signal frequency is 4000 Hz?

19. The power spectral density (PSD) of a noise process is given by

$$S_N(f) = \begin{cases} 10^{-8}\left(1 + \dfrac{|f| - 10^8}{10^8}\right) & |f| < 10^8 \\ 0 & |f| > 10^8 \end{cases}$$

The noise is passed through a unit-gain ideal bandpass filter, centered at 50 MHz and having a bandwidth of 2 MHz.

(a) Sketch neatly the PSD of the output noise process.

(b) Determine the output noise power.

(c) Using the band-pass representation for the output noise process, sketch the PSD of the in-phase and quadrature noise components, and determine their respective powers.

20. A plane wave in free space with

$\vec{E} = \left(\sqrt{\pi}\right)\left(10.0\hat{x} + 11.8\hat{y}\right).\exp j\left(4\pi \times 10^8 t - kz\right)$, where $\hat{x}$ and $\hat{y}$ are unit vectors in the x-y directions, respectively, is incident normally on a semi-infinite block of ice as shown in Fig.P20.

ZOLLEGE.in

For ice, $\mu=\mu_0$, $\sigma = 0$, and $\varepsilon = 9\varepsilon_0\,(1 - j0.001)$.

(a) Calculate the average power density associated with the incident wave.

(b) Calculate the skin depth in ice.

(c) Estimate the average power density at a distance of 5 times the skins depth in the ice block, measured from the interface.

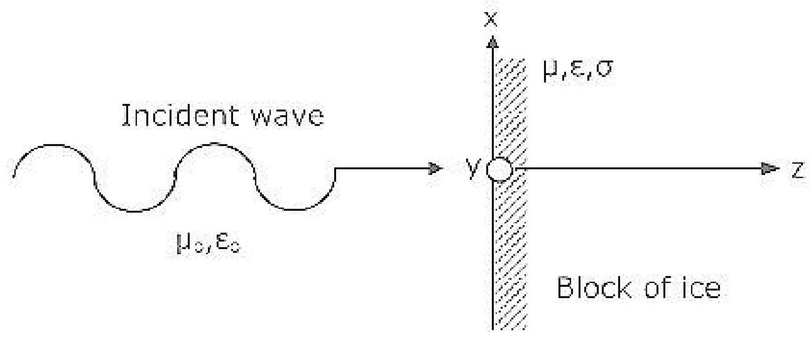


21. A 100 m section of an air-filled rectangular wave-guide operating in the $TE_{10}$ mode has a cross-sectional dimension of 1.071 cm × 0.5 cm. Two pulses of 21 GHz and 28 GHz are simultaneously launched at one end of the wave-guide section. What is the time delay difference between the two pulses at the other end of the wave-guide?

22. The average power of an omni directional antenna varies as the magnitude of $\cos\theta$, where $\theta$ is the azimuthal angle. Calculate the maximum Directive Gain of the antenna and the angles at which it occurs.

ZOLLEGE.in