Time: 3 hours Maximum Marks: 200 Part A: 80 Marks Part B: 120 Marks

1. *This paper consists of two parts: "Part A" and "Part B".*
2. *Part A contains 40 questions, each carrying 2 marks.*
3. *Part B contains 15 questions, each carrying 8 marks.*
4. *Read the instructions given at the beginning of each part carefully.*
5. *Attempt ALL questions.*
6. *There is no negative marking.*

PART – A

1.1 Relative to a given fixed tree of a network,

(a) Link currents form an independent set

(b) Branch voltage from an independent set

(c) Link currents from an independent set

(d) Branch voltage from an independent set

1.2 For a 2-port network to be reciprocal

(a) $z_{11} = z_{22}$ (b) $y_{21} = y_{12}$ (c) $h_{21} = -h_{12}$ (d) $AD - BC = 0$

1.3 For the series R-L circuit of figure(a), the partial fissure diagram at a certain frequency is shown in figure (b).The operating frequency of the circuit is:

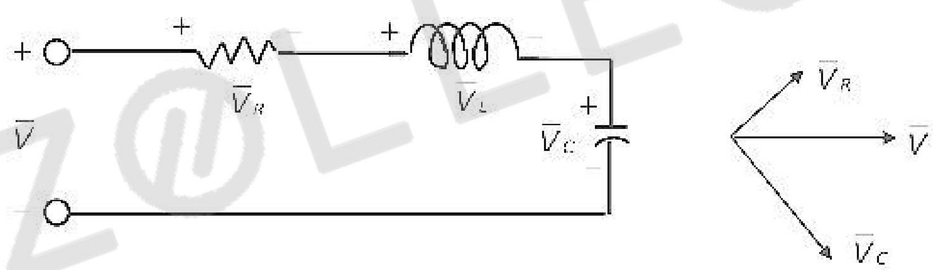

(a) (b)

(a) equal to the resonance frequency

(b) less than the resonance frequency

(c) greater than resonance frequency (d) not zero

1.4 For the compensated attenuator of figure, the impulse response under the condition $R_1C_1 = R_2C_2$ is:

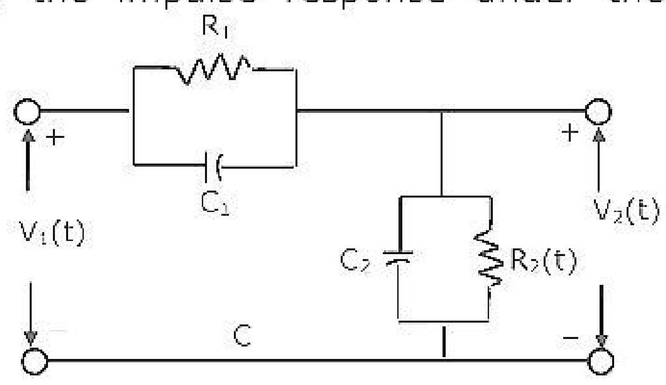

(a) $\frac{R_2}{R_1 + R_2}\left[1 - e^{\frac{1}{R_1C_1}}\right]u(t)$

(b) $\frac{R_2}{R_1 + R_2}\delta(t)$

(c) $\frac{R_2}{R_1 + R_2}u(t)$ (d) $\frac{R_2}{R_1 + R_2}1 - e^{\frac{1}{R_1C_1}}.u(t)$

ZOLLEGE.in

1.5 Of the four networks, N_1, N_2, N_3 and N_4 of figure, the networks having identical driving point functions are

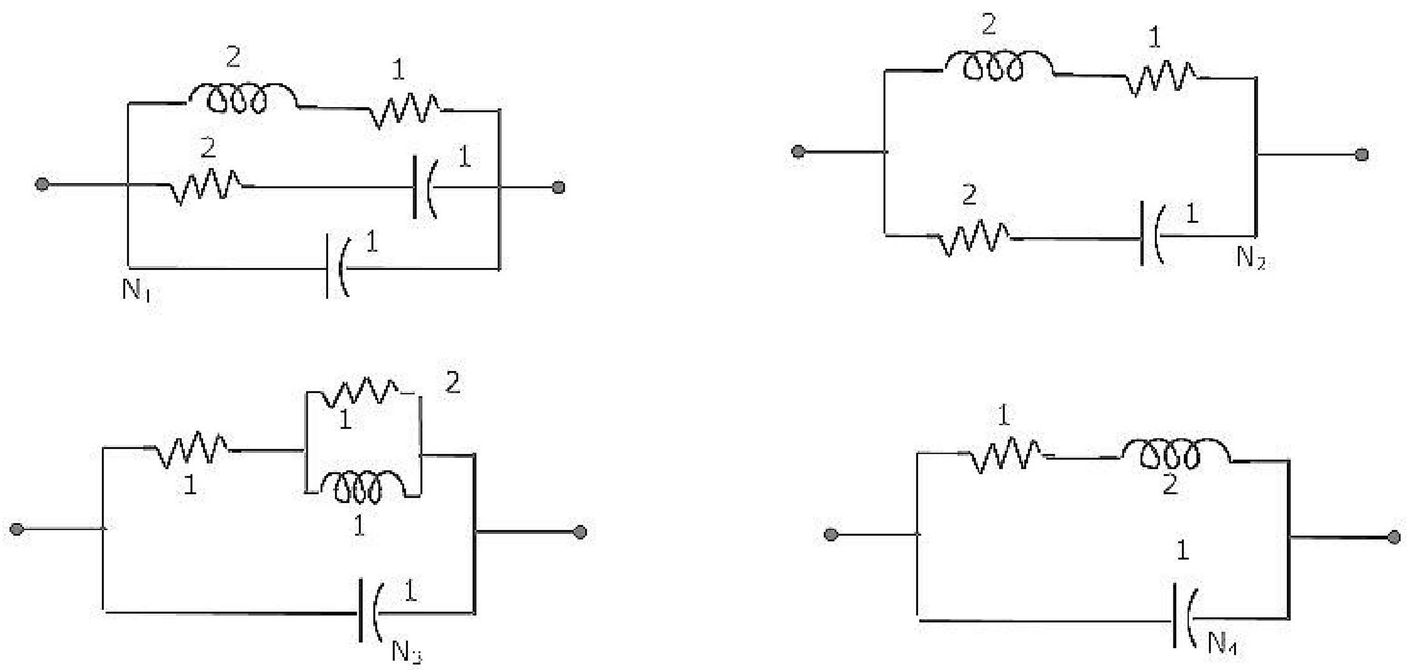

(a) N_1 and N_1 (b) N_2 and N_4 (c) N_1 and N_3 (d) N_1 and N_4

1.6 A linear time invariant system is described by the state variable model

$$\begin{bmatrix} x_1 \\ x_2 \end{bmatrix} = \begin{bmatrix} -1 & 0 \\ 0 & -2 \end{bmatrix} \begin{bmatrix} x_1 \\ x_2 \end{bmatrix} + \begin{bmatrix} 0 \\ 1 \end{bmatrix} u = \begin{bmatrix} 1 & 2 \end{bmatrix} \begin{bmatrix} x_1 \\ x_2 \end{bmatrix}$$

(a) The system is completely controllable
(b) The system is not completely controllable
(c) The system is completely observable
(d) The system is not completely observable

1.7 A process with open-loop model $G(s) = \dfrac{ke^{-sT_d}}{\tau s + 1}$ is controlled by a PID controller. For this process

(a) the integral mode improves transient performance
(b) the integral mode improves steady state performance
(c) the derivative mode improves transient performance
(d) the derivative mode improves steady state performance

1.8 A linear discrete time system has the characteristic equation, $z^3 - 0.81z = 0$. The system

(a) is stable (b) is marginally stable
(c) in unstable
(d) stability cannot be assessed from the given information

ZOLLEGE.in

1.9 Bode plot of a stable system is shown in figure. The transfer function of the system is _____.

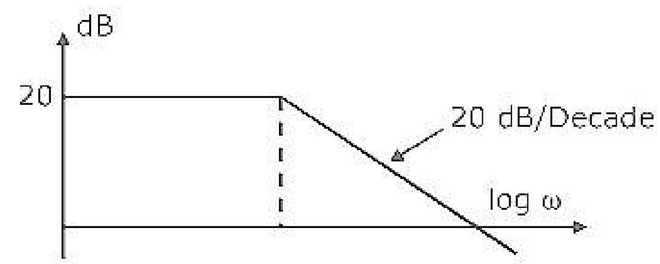

1.10 Given a unity feedback system with open loop transfer function, $G(s) = \dfrac{K}{s(s+1)(s+2)}$. The root locus plot of the system is of the form.

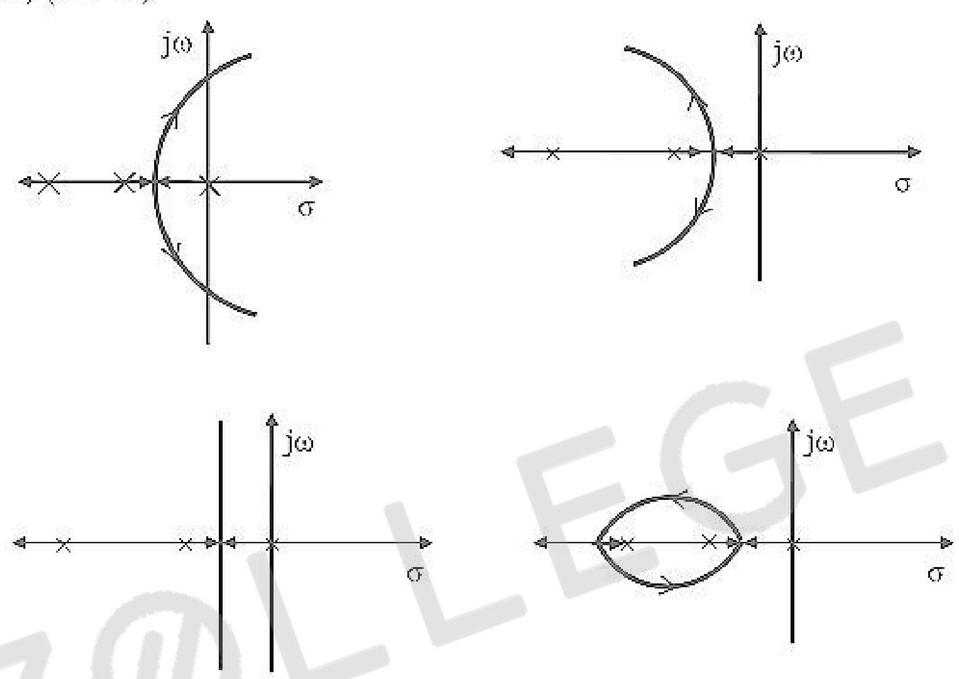

1.11 A semiconductor is irradiated with light such that carriers are uniformly generated throughout its volume. The semiconductor is n-type with $N_D = 10^{19}$ per cm^3. If the excess electron concentration in the steady state id $\Delta n = 10^{15}$ per cm^3 and if $\tau_p = 10\mu$ sec [minority carrier life time] the generation rate due to irradiation

(a) is $10^{20} e-h$ pair/cm^3 / s

(b) is $10^{24} e-h$ pair/cm^3 / s

(c) is $10^{10} e-h$ pair/cm^3 / s

(d) cannot be determined as the given data is insufficient

1.12 A P – N junction in series with a 100 ohms resistor, is forward biased so that a current of 100 mA flows. If the voltage across this combination is instantaneously reversed to 10 V at t = 0, the reverse current that flows through the diode at t = 0 is approximately given by

(a) 0 mA (b) 100 mA (c) 200 mA (d) 50 mA

ZOLLEGE.in

1.13 An infra red LED is usually fabricated from

(a) Ge (b) Si (c) Ga As (d) Ga As P

1.14 In a transistor having finite B, the forward bias across the base emitter junction is kept constant and the reverse bias across the collector base junction is increased. Neglecting the leakage across the collector base junction and the depletion region generating current, the base current will ____. (increase/decrease/remain constant).

1.15 An n-channel JFET has a pinch-off voltage of $V_p = -5V, V_{DS}(\max) = 20V$, and $\delta_m = 2mA/V$. The minimum 'ON' resistance is achieved in the JEFT for

(a) $V_{GS} = -7V$ and $V_{DS} = 0V$ (b) $V_{GS} = 7V$ and $V_{DS} = 0V$

(c) $V_{GS} = 0V$ and $V_{DS} = 20V$ (d) $V_{GS} = -7V$ and $V_{DS} = 20V$

1.16 The JFET in the circuit shown in figure has an $I_{DSS} = 10mA$ and $V_p = 5V$. The value of the resistance R_s for a drain current $I_{DS} = 6.4mA$ is (select the nearest value)

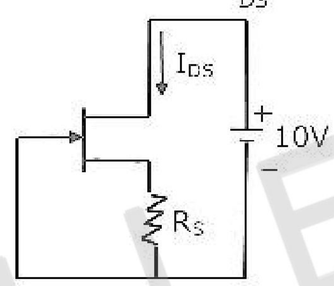

(a) 150 ohms (b) 470 ohms (c) 560 ohms (d) 1 kilo ohm

1.17 An op.amp has an offset voltage of 1 mV and is ideal in all other respects. If this op.amp is used in the circuit shown in figure, the output voltage will be (select the nearest value)

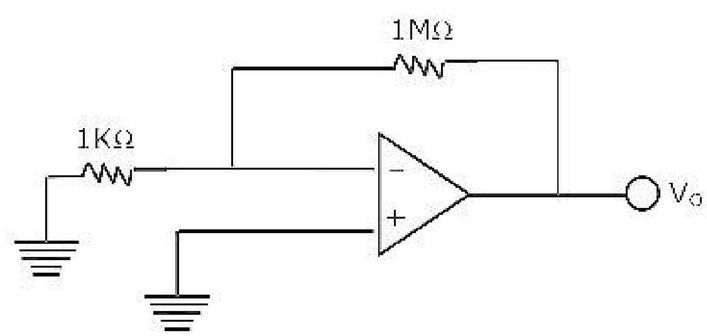

(a) 1 mV (b) 1 V (c) ± 1 V (d) 0 V

ZOLLEGE.in

1.18 If the transistors in figure, have high values of β and a V_{BE} of 0.65 volt, the current I, flowing through the 2 kilo ohms resistance will be _____.

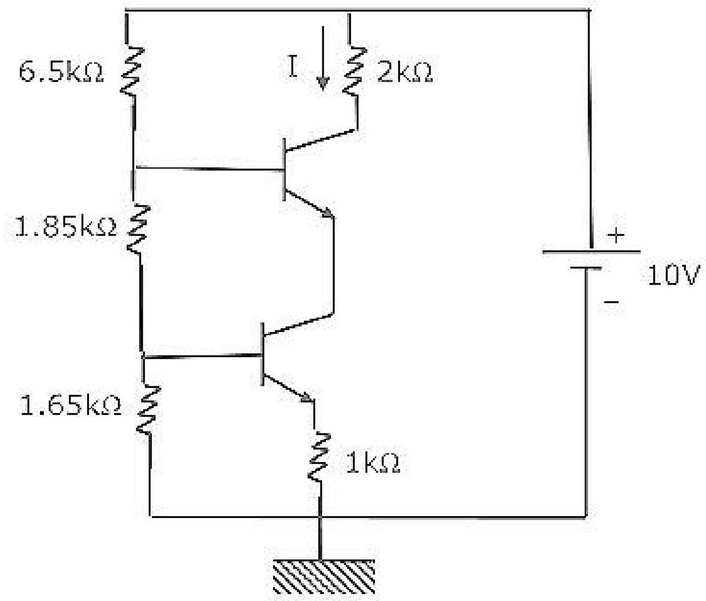

1.19. The circuit of figure uses an ideal op amp. For small positive values of V_{in}, the circuit works as

(a) a halfwave rectifier

(b) a differentiator

(c) a logarithmic amplifier

(d) an exponential amplifier

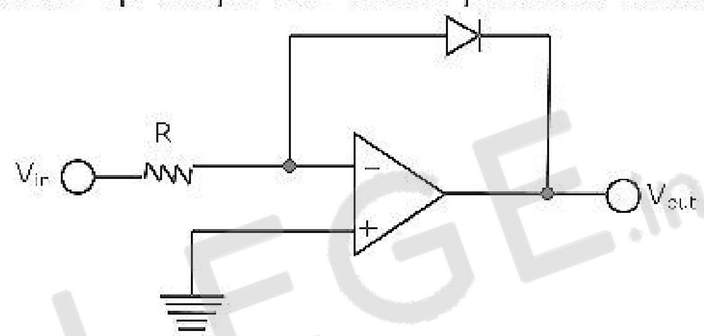

1.20. Assume that the operational amplifier in figure is ideal. The current I, through the 1 K ohm resistor is _____.

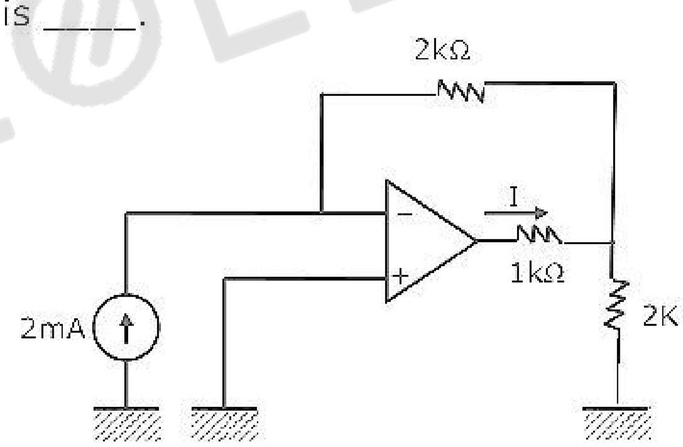

1.21. The 6 V Zener diode shown in figure has zero zener resistance and a knee current of 5 mA. The minimum value of R so that the voltage across it does not fall below 6 V is:

(a) 1.2 K ohms

(b) 80 ohms

(c) 50 ohms

(d) 0 ohms

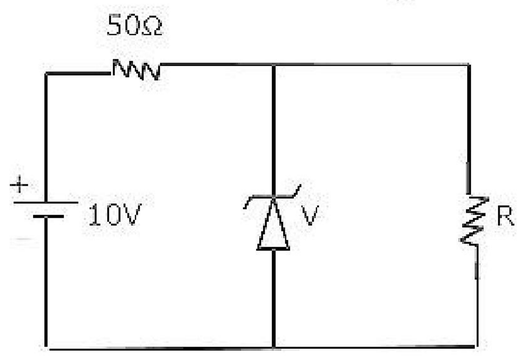

ZOLLEGE.in

1.22. The logic realized by the circuit shown in figure is:

(a) F = A.C

(b) F = A + C

(c) F = B.C

(d) F = B + C

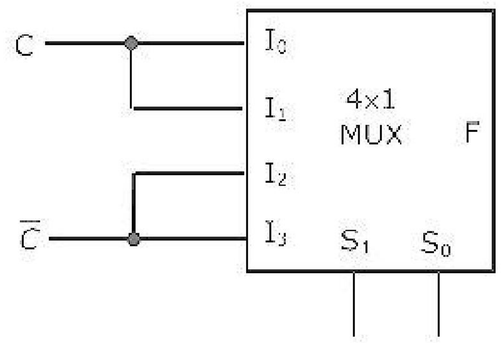

1.23. Choose the correct statement(s) from the following:

(a) PROM contains a programmable AND array and a fixed OR array

(b) PLA contains a fixed AND array and a programmable OR array

(c) PROM contains a fixed AND array and a programmable OR array

(d) PLA contains a programmable AND array and a programmable OR array

1.24. The figure shows the circuit of a gate in the Resistor Transistor Logic (RTL) family. The circuit represents a

(a) NAND

(b) AND

(c) NOR

(d) OR

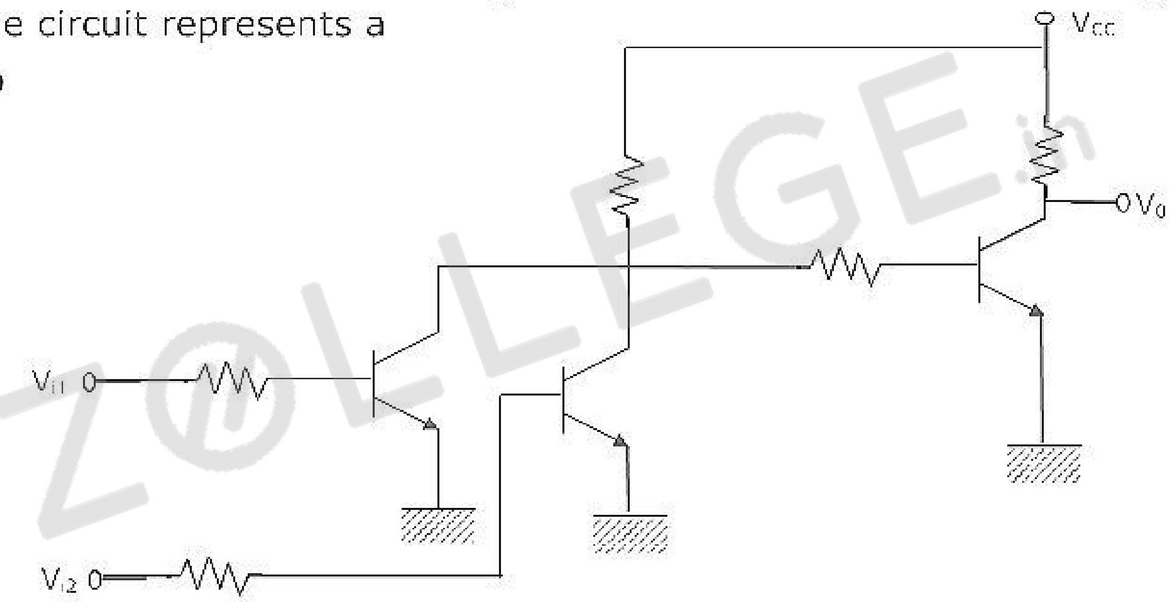

1.25. The initial contents of the 4-bit serial-in-parallel-out, right-shift, Shift Register shown in figure, is 0110. After three clock pulses are applied, the contents of the Shift Register will be

(a) 0 0 0 0

(b) 0 1 0 1

(c) 1 0 1 0

(d) 1 1 1 1

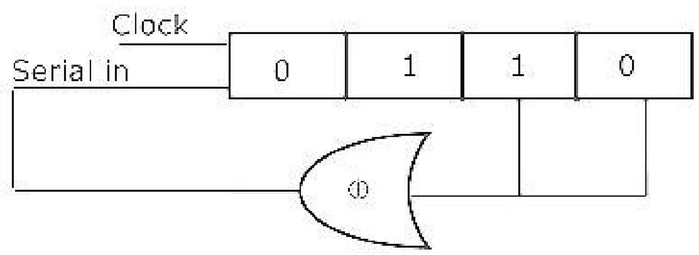

1.26. In an 8085 microprocessor system with memory mapped I/O,

(a) I/O devices have 16 bit addresses

(b) I/O devices are accessed using IN and OUT instructions

(c) there can be a maximum of 256 input devices and 256 output devices

(d) arithmetic and logic operations can be directly performed with the I/O data.

ZOLLEGE.in

1.27. The following program is run on 8085 microprocessor:

Memory Address in hex	Instruction
2000	LXI SP, 1000
2003	PUSH H
2004	PUSH D
2005	CALL 2050
2008	POP H
2009	HLT

At the completion of execution of the program, the program Counter of the 8085 contains _____ and the Stack Pointer contains _____.

1.28. Dual slope integration type Analog-to-digital converters provide

(a) higher speeds compared to all other types of A/D converters

(b) very good accuracy without putting extreme requirements on component stability

(c) good rejection of power supply hum

(d) better resolution compared to all other types of A/D converters for the same number of bits.

1.29. Which of the following signals is/are periodic?

(a) $S(t) = \cos 2t + \cos 3t + \cos 5t$

(b) $S(t) = \exp(j8\pi t)$

(c) $S(t) = \exp(-7t)\sin 10\pi t$

(d) $S(t) = \cos 2t \cos 4t$

1.30. If $G(f)$ represents the Fourier transform of a signal $g(t)$ which is real and odd symmetric in time, then

(a) $G(f)$ is complex

(b) $G(f)$ is imaginary

(c) $G(f)$ is real

(d) $G(f)$ is real and non-negative

1.31. The maximum power efficiency of an AM modulator is

(a) 25% (b) 50% (c) 75% (d) 100%

1.32. For a random variable x following the probability density function, $p(x)$, shown in figure the mean and the variance are, respectively,

(a) $\frac{1}{2}$ and $\frac{2}{3}$

(b) 1 and $\frac{4}{3}$

(c) 1 and $\frac{2}{3}$

(d) 2 and $\frac{4}{3}$

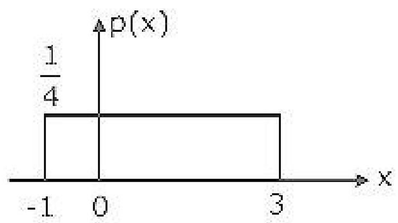

ZOLLEGE.in

1.33. The bit stream 01001 is differentially encoded using 'Delay and Ex OR' scheme for DPSK transmission. Assuming the reference bit as a '1' and assigning phases of '0' and π for 1's and 0's respectively, in the encoded sequence, the transmitted phase sequence becomes

(a) $\pi 0 \pi\pi 0$ (b) $0\pi\pi 00$ (c) $0\pi\pi\pi 0$ (d) $\pi\pi 0\pi\pi$

1.34. Coherent demodulation of FSK signal can be effected using

(a) correlation receiver

(b) band pass filters and envelope detectors

(c) matched filter

(d) discriminator detection

1.35. Source encoding in a data communication system is done in order to

(a) enhance the information transmission rate

(b) reduce the transmission errors

(c) conserve the transmitted power

(d) facilitate clock recovery in the receiver

1.36. A transmission line whose characteristic impedance is a pure resistance

(a) must be a lossless line (b) must be a distortionless line

(c) may not be a lossless line (d) may not be distrotionless line

1.37. Which of the following statements is/are correct?

(a) All the resonant frequencies of a microwave cavity are harmonics of a single frequency

(b) No two of the resonant frequencies of a microwave cavity are harmonics of a single frequency

(c) Resonant frequencies of a microwave cavity form distinct sets of harmonically related frequency

(d) None of the above, because a microwave cavity does not resonate at a number of frequencies.

1.38. Two dissimilar antennas having their maximum directivities equal,

(a) must have their beam-widths also equal

(b) cannot have their beam widths equal because they are dissimilar antennas

(c) may not necessarily have their maximum power gains equal

(d) must have their effective aperture areas (capture areas) also equal.

ZOLLEGE.in

1.39. The beam width between first null of uniform linear array of N equally spaced (element spacing = d), equally excited antennas is determined by

(a) N alone and not by d

(b) d alone and not by N

(c) the ratio, $\left(\frac{N}{d}\right)$

(d) the product, (Nd)

1.40. In a multi-cavity magnetron, strapping is employed primarily

(a) to prevent mode jumping

(b) to increase the separation between the resonant frequencies in the π mode and in the adjacent modes

(c) to reduce the back heating of the cathode

(d) to increase the output of the magnetron.

PART– B

(15 × 8 = 120 MARKS)

2. The two-port Darlington impedance booster of figure uses identical transistors $(h_{ie} = 1K, h_{fe} = 100, h_{re} = h_{oe} = 0)$. Calculate the z-parameters of the network (use relevant approximations)

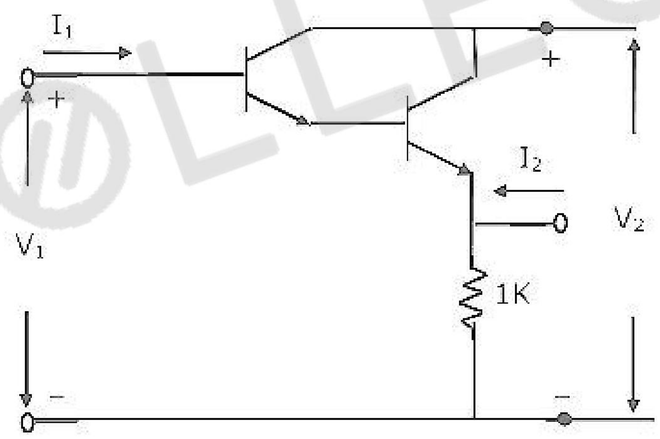

3. Block diagram model of a position control system is shown in figure.

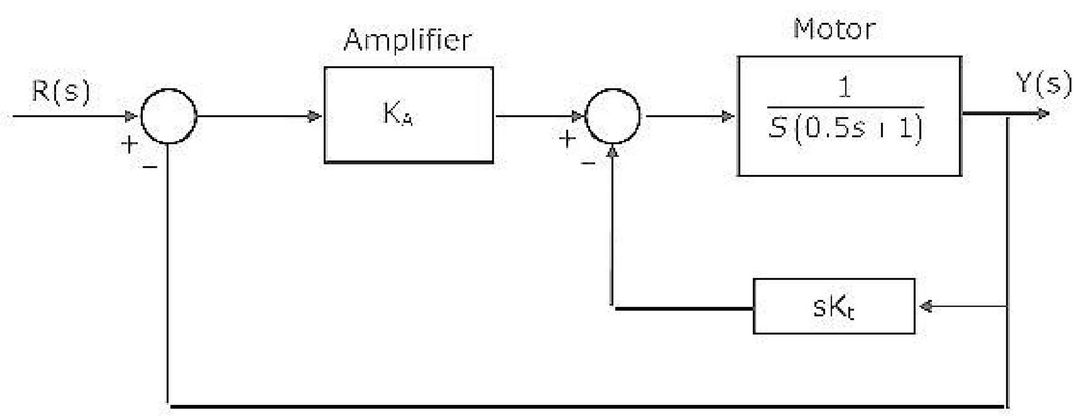

ZOLLEGE.in

(a) In absence of derivative feedback $(K_t = 0)$, determine damping ratio of the system for amplifier gain $K_A = 5$. Also find the steady state error to unit ramp input.

(b) Find suitable values of the parameters K_A and K_t so that damping ratio of the system is increased to 0.7 without affecting the steady state error as obtained in part (a).

4. A unity feedback system has open loop transfer function $G(s) = \dfrac{1}{s(2s+1)(s+1)}$.

Sketch Nyquist plot for the system and there from obtain the gain margin and the phase margin.

5. A P-N-P transistor shown in figure has uniform doping in the emitter, based and collector regions, where in the doping concentrations are 10^{19} per cm^3, 10^{17} per cm^3, and 10^{15} per cm^3, respectively. The minority carrier diffusion lengths in the emitter and the base regions are 5 microns and 100 microns, respectively. Assuming low level injection conditions and using the law of the junction, calculate the collector current density and the base current density and the base current density due to base recombination. [Suitable approximations may be made if required]. In all the regions of the transistor $D_p = 8cm^2$ per sec.

$D_n = 16cm^2$ per sec, $n_i = 1.5 \times 10^{10}$ per cm^2, $KT/q = 26mV$, $q = 1.6 \times 10^{-19}c$

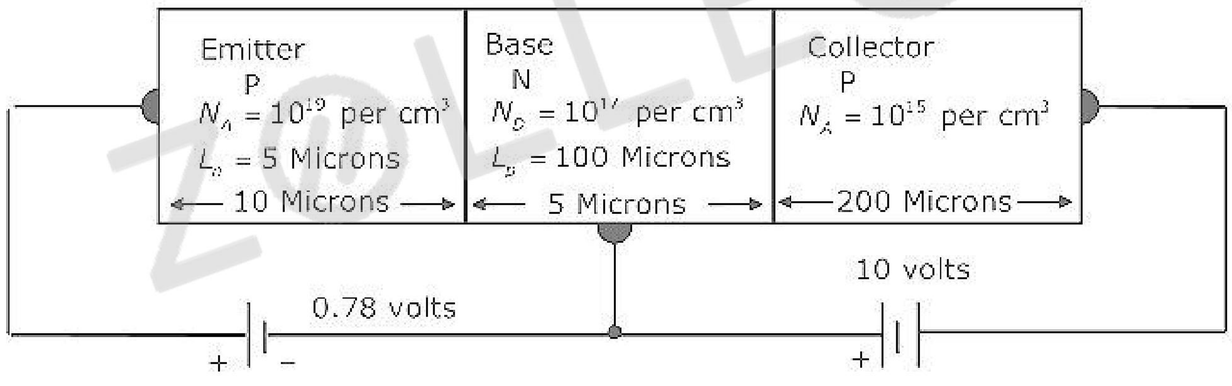

6. An n-channel MOSFET(T) having a V_t of 2 V [Threshold voltage] is used in the circuit shown in figure. Initially, t is off an in steady state. At time t = 0, a step voltage of magnitude 4V is applied to the input so that the MOSFET turns 'ON' instantaneously. Draw the equivalent circuit and calculate the time taken for the output V_o to fall to 5V. The device constant of the MOSFET, K = 5 mA/V², $R_{DS} = \infty, C_{DS} = 0; C_{DG} = 0$.

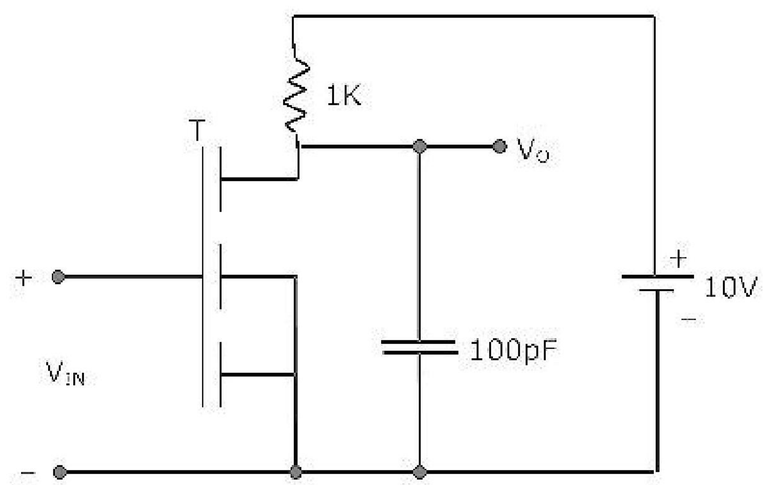

ZOLLEGE.in

7. The transistors in the differential amplifier shown in figure are identical with $h_{fe} = 100$ and $r_e = 25$ ohms at 1 mA collector current. The circuit has a Common Mode Rejection Ratio (CMRR) of 100.

(a) What is the differential gain $\frac{v_0}{(v_1 - v_2)}$ of the circuit?

(b) What is the common mode gain of the circuit?

(c) If d.c. voltage of 1010 mV and 990 mV are allied to inputs 1 and 2 respectively with reference to ground, what will be the output voltage V_o ?

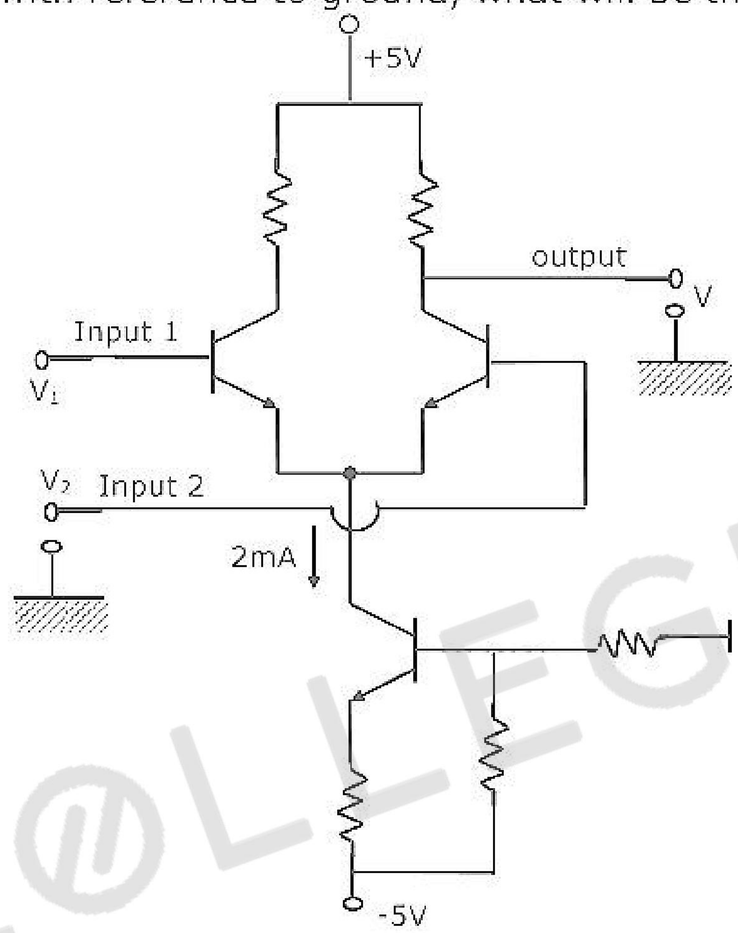

8. Consider the circuit shown in figure. This circuit uses an ideal operational amplifier. Assuming that the impedances at nodes A and B do not load the preceding bridge circuit, calculate the output voltage V_0.

(a) when $R_a = R_b = R_d = 100$ ohms

(b) when $R_a = R_b = R_c = 100$ ohms and $R_d = 120$ ohms

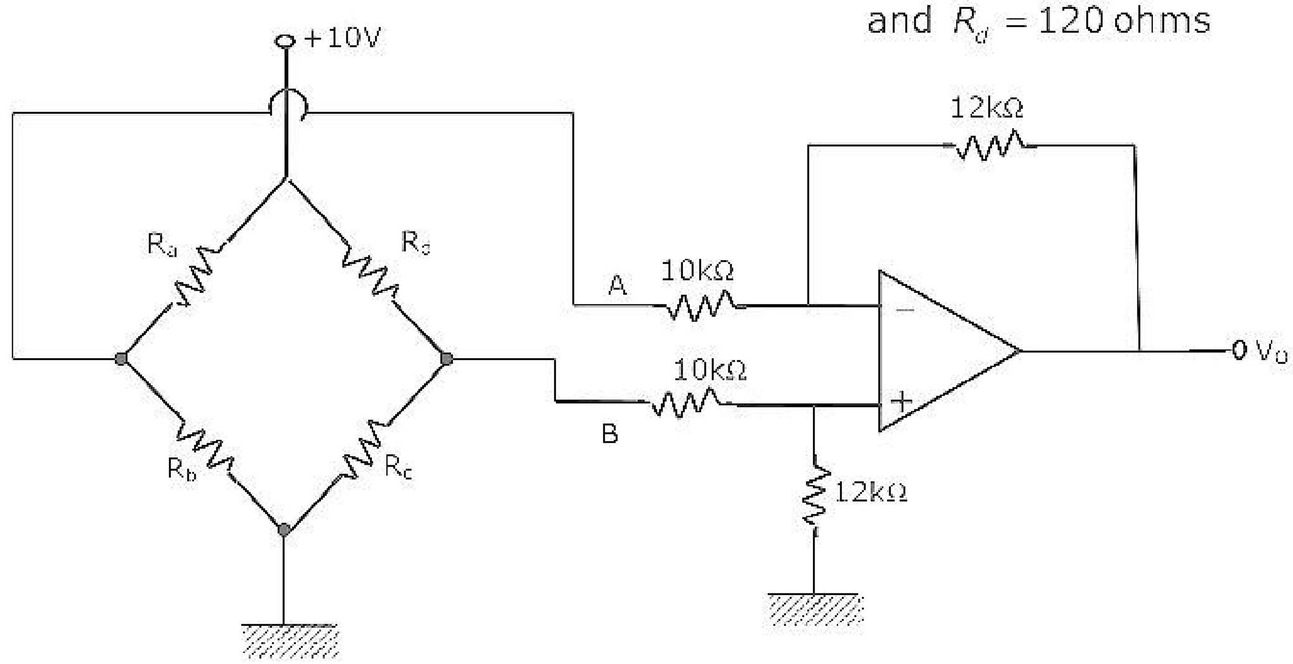

ZOLLEGE.in

9. A combinational circuit has three inputs A, B and C and an output F.F. is true only for the following input combinations?

A is false and B is true

A is false and C is true

A, B and C are all false

A, B and C are all true

(a) Write the truth table for F. use the convention, true = 1 and false = 0.

(b) Write the simplified expression for F as a Sum of Products.

(c) Write the simplified expression for F as a product of Sums.

(d) Draw a logic circuit implementation of F using the minimum number of 2 input NAND gates only.

10. A new clocked X-Y flip flop is defined with two inputs, X and Y is addition to the clock input. The flip flop functions as follows:

If XY=00, the flip flop changes stage with each clock pulse

If XY=01, the flip flop state Q becomes 1 with the next clock pulse

If XY=10, the flip flop state Q becomes 0 with the next clock pulse

If XY=11, the change of state occurs with the clock pulse

(a) Write the Truth table for the X-Y flip flop

(b) Write the Excitation table for the X-Y flip flop

(c) It is desired to convert a J-K flip flop into the X-Y flip flop by adding some external gates, if necessary. Draw a circuit to show how you will implement in X-Y flip flop using a J-K flip flop.

11. A sinusoidal signal of 4 kHz frequency is used as a modulating signal for an FM and an AM transmitter. Both of the transmitters use the same amplitude for the unmodulated carrier. The peak frequency deviation in the FM transmitter is set to four times the bandwidth of the AM transmitter and, the magnitudes of the spectral components at $f_c \pm 4kHz\,(f_c = \text{carrier frequecy})$ are same for beoth of the transmitters.

Determine the modulation indices for the AM and FM transmitters.

[If required use the values of the Besset function given below:

$J_1(2) = 0.577, J_1(4)\,0.066, J_1(8) = 0.235, J_1(16) = 0.094$]

12. Figure shows the memory circuit of an 8085 microprocessor.

(a) What is the total size of the memory in the circuit?

(b) What are the beginning and ending addresses of the memory in Chip 1? (Give the answer in hexadecimal numbers)

(c) What are the beginning and ending addresses of the memory in Chip 2?

(d) Are the memory chips in the circuit ROM or RAM?

ZOLLEGE.in

(e) How will you replace the two NAND gates in the circuit with one 3 to 8 decoder without changing the memory size or the memory addresses? Assume that the decoder has one active high enable E_1 and one active low enable E_2.

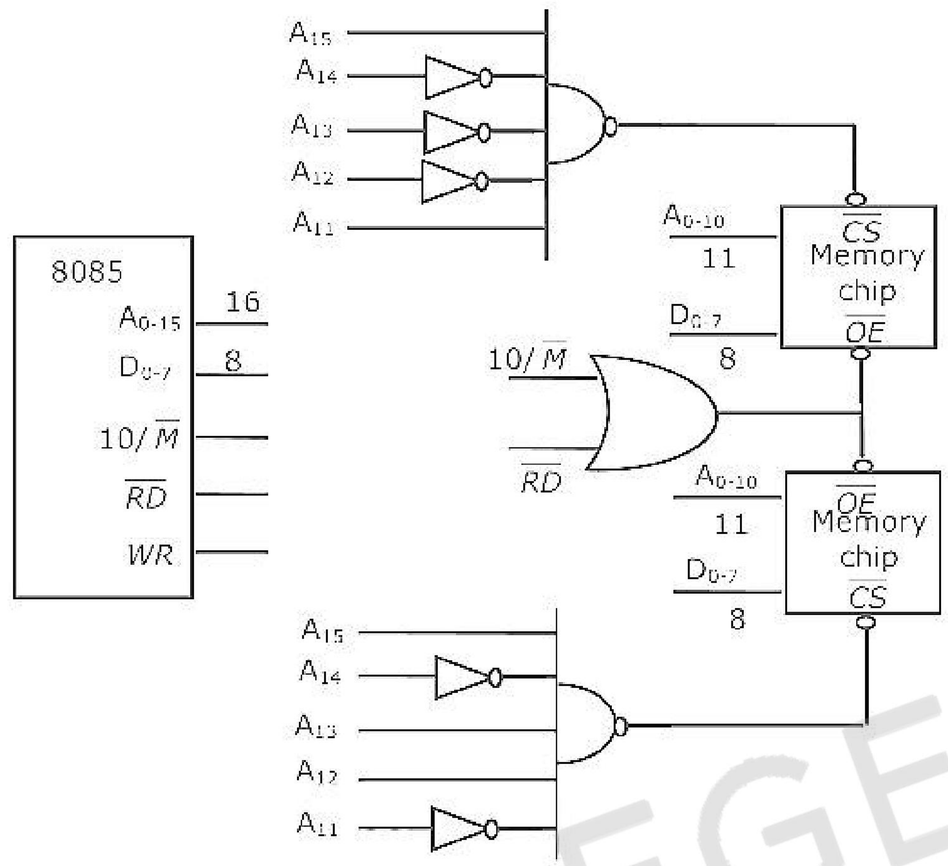

13. (a) A low pass signal x(t) has a spectrum given by

$$x(f) = 1 - 1\frac{f}{2000}, \text{ for } |f| \le 2000Hz.$$
$$0, \quad \text{elsewhere.}$$

Assuming that x(t) is ideally sampled at a sampling frequency of 3 kHz sketch.

(i) $X(f)$, and

(ii) the spectrum of the sampled signal for $|f| \le 3kHz$.

(b) An analog low pass signal of 4 kHz bandwidth is sampled at the Nyquist rate, subsequently quantized and encoded into a binary PCM wave with 128 quantization levels. The word synchronization is effected by adding a synchronizing pulse at the end of each code word. Determine the bit ratio to the resulting PCM signal.

14. A received binary NRZ signal assumes the voltage levels of 500 millvolts and -500 millivolts respectively for '1' and '0' transmission with a bit rate or r bits/second. The signal is corrupted by additive white Gaussian noise with a two sided spectral density of volts^2/Hz. The received signal is processed by an integrate and Dump circuit in every bit interval and compared with a zero threshold to take a bit decision.

Assuming '1' and '0' transmission to be equally likely, determine the maximum value of r such that the bit error probability $\le 10^{5}$

ZOLLEGE.in

Given $$x = \frac{1}{\sqrt{2\pi}} \int_x^{\infty} e^{\frac{-z^2}{2}} dz = 10^{-5} \text{ at } x = 4.27$$

erfc $$x = \frac{1}{\sqrt{\pi}} \int_x^{\infty} e^{\frac{-z^2}{2}} 2dz = 2 \times 10^{5} \text{ at } x = 3.02$$

15. A uniform plane wave traveling in free space along the +z direction and having its electric field along the x-direction, is normally incident on a thick brass sheet, infinite in extent along the x-and y-directions). The electric field intensity of the wave is given by

$$E_x = 1225 \cos\left(5.89 \times 10^{10} t - \beta z\right) \text{ volts/metre.}$$

Calculate the power per square metre that causes heating of the brass sheet taking $\varepsilon_r = 1, \mu_r = 1$ and $\sigma = 1.649 \times 10^7$ mhos/metre for brass.

16. Elements of a linear array of three equally spaced (element spacing = 0.5λ) vertical mast radiators, are excited as given in figure. For the horizontal plane radiation pattern of the array, determine the direction of the major lobe (main lobe or principal lobe), and calculate its half-power beam width in degrees.

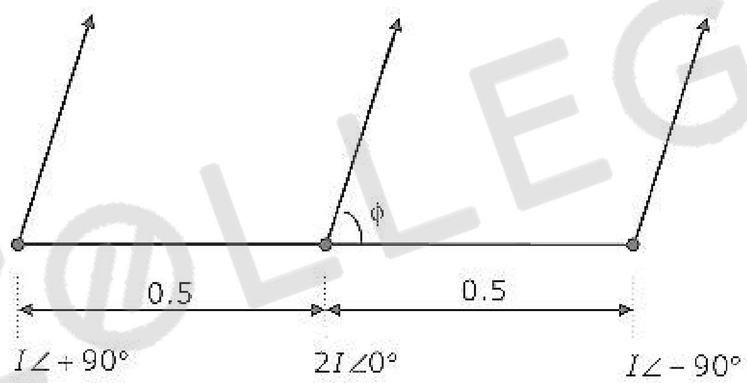

ZOLLEGE.in