SECTION - A

1. This question consists of TWENTY-FIVE sub-questions (1.1 – 1.25) of ONE mark each. For each of these sub-questions, four possible alternatives (A, B, C and D) are given, out of which ONLY ONE is correct. Indicate the correct answer by darkening the appropriate bubble against the question number on the left hand side of the Objective Response Sheet (ORS). You may use the answer book provided for any rough work, if needed.

1.1 i^i, where $i = \sqrt{-1}$, is given by

(a) 0 (b) $e^{\frac{-\pi}{2}}$ (c) $\frac{\pi}{2}$ (d) 1

1.2 The expression curl (grad f), where f is a scalar function, is

(a) equal to $\nabla^2 f$ (b) equal to div (grad f)

(c) a scalar of zero magnitude (d) a vector of zero magnitude

1.3 The one dimensional heat conviction partial differential equation

$$\frac{\partial T}{\partial t} = \frac{\partial^2 T}{\partial x^2}, \text{is}$$

(a) parabolic (b) hyperbolic (c) elliptic (d) mixed

1.4 In the Gauss elimination method for solving a system of linear algebraic equations, triangularization leads to

(a) diagonal matrix (b) lower triangular matrix

(c) upper triangular matrix (d) singular matrix

1.5 If the two principal strains at a point are 1000×10^{-6} and -600×10^{-6}, then the maximum shear strain is

(a) 800×10^{-6} (b) 500×10^{-6} (c) 1600×10^{-6} (d) 200×10^{-6}

1.6 If the ratio of the diameter of rivet hole to the pitch of rivets is 0.25, then the tearing efficiency of the joint is

(a) 0.50 (b) 0.75 (c) 0.25 (d) 0.87

1.7 In thick film hydrodynamic journal bearings, the coefficient of friction

(a) increases with increase in load

(b) is independent of load

(c) decreases with increase in load

(d) may increase or decrease with increase in load

ZOLLEGE.in

1.8 A ball A of mass m falls under gravity from a height h and strikes another ball B of mass m which supported at rest on a spring of stiffness k. Assume perfectly elastic impact. Immediately after the impact

(a) the velocity of ball A is $\frac{1}{2}\sqrt{2gh}$
(b) the velocity of ball A is zero
(c) the velocity of both ball is $\frac{1}{2}\sqrt{2gh}$
(d) None of the above

1.9 The bolts in a rigid flanged coupling connecting two shafts transmitting power are subjected to

(a) shear force and bending moment
(b) axial force
(c) torsion
(d) torsion and bending moment

1.10 A wheel of mass m and radius r is in accelerated rolling motion without slip under a steady axial torque T. If the coefficient of kinetic friction is μ, the friction force from the ground on the wheel is:

(a) μ mg
(b) $\frac{T}{r}$
(c) zero
(d) None of the above

1.11 In spur gears, the circle on which the involute is generated is called the

(a) pitch circle
(b) clearance circle
(c) base circle
(d) addendum circle

1.12 The specific heats of an ideal gas depend on its

(a) temperature
(b) pressure
(c) volume
(d) molecular weight and structure

1.13 For reversible adiabatic compression in a steady flow process, the work transfer per unit mass is

(a) $\int p\,dv$
(b) $\int v\,dp$
(c) $\int T\,ds$
(d) $\int s\,dT$

1.14 A cycle consisting of two reversible isothermal processes and two reversible isobaric processes is known as

(a) Atkinson cycle
(b) Stirling cycle
(c) Brayton cycle
(d) Ericsson cycle

1.15 In flow through a pipe, the transition from laminar to turbulent flow does not depend on

(a) velocity of the fluid
(b) density of the fluid
(c) diameter of the pipe
(d) length of the pipe

ZOLLEGE.in

1.16 For a given heat flow and for the same thickness, the temperature drop across the material will be maximum for

(a) copper (b) steel

(c) glass-wool (d) refractory brick

1.17 When wet steam flows through a throttle valve and remains wet at exit

(a) its temperature and quality increases

(b) its temperature decreases but quality increases

(c) its temperature increases but quality decreases

(d) its temperature and quality decreases

1.18 The dimenation of surface tension is

(a) ML^{1} (b) $L^{2}T^{1}$ (c) $ML^{1}T^{1}$ (d) MT^{2}

1.19. The rake angle in a drill

(a) increases from centre to periphery

(b) decreases from centre to perihery

(c) remains constant

(d) is irrelevant to the drilling operation

1.20. Light impurities in the molten metal are prevented from reaching the mould cavity by providing a

(a) strainer (b) button well

(c) skim bob (d) all of the above

1.21. Preheating before welding is done to

(a) make the steel softer

(b) burn away oil, grease, etc., from the plate surface

(c) prevent cold cracks

(d) prevent plate distortion

1.22. The fit on a hole-shaft system is specified as 117-s6. The type of fit is

(a) clearance fit (b) running fit (sliding fit)

(c) push fit (transition fit) (d) force fit (interference fit)

1.23. The iron-carbon diagram an the TTT curves are determined under

(a) equilibrium and non-equilibrium conditions respectively

(b) non-equilibrium and equilibrium conditions respectively

(c) equilibrium conditions for both

(d) non-equilibrium conditions for both

ZOLLEGE.in

1.24. If at the optimum in a linear programming problem, a dual variable corresponding to a particular primal constraint is zero, then it means that

(a) right hand side of the primal constraint can be altered without affecting the optimum solution

(b) changing the right hand side of the primal constraint will disturb the optimum solution

(c) the objective function is unbounded

(d) the problem is degenerate

1.25 The individual human variability in time studies to determine the production standards is taken care of by

(a) personal allowances (b) work allowances

(c) rating factor (d) None of the above

2. This question consists of TWENTY-FIVE sub-questions (2.1 – 2.25) of TWO marks each. For each of these sub-questions, four possible alternatives (A,B, C and D) are given, out of which ONLY ONE is correct. Indicate the correct answer by darkening the appropriate bubble against the question number on the left hand side of the Objective Response Sheet (ORS). You may use the answer book provided for any rough work, if needed.

2.1 The eigen values of $\begin{bmatrix} 1 & 1 & 1 \\ 1 & 1 & 1 \\ 1 & 1 & 1 \end{bmatrix}$ are:

(a) 0,0,0 (b) 0,0,1 (c) 0,0,3 (d) 1,1,1

2.2. A ball falls from a height of 1m, hits the ground and rebounds with half its velocity just before impact. Then after rising it falls and hits the ground and again rebounds with half its velocity just before impact, and so on. The total distance traveled by the ball till it comes to rest on the ground is

(a) 2m (b) $\frac{5}{3}m$ (c) $\frac{5}{2}m$ (d) $\frac{5}{4}m$

2.3. The particular solution for the differential equation

$$\frac{d^2y}{dx^2} + 3\frac{dy}{dx} + 2y = 5\cos x \text{ is:}$$

(a) 0.5 cos x + 1.5 sin x (b) 1.5 cos x + 0.5 sin x

(c) 1.5 sin x (d) 0.5 cos x

2.4. A solid shaft can resist a bending moment of 3.0 kNm and a twisting moment of 4.0 kNm together, then the maximum torque that can be applied is:

(a) 7.0 kNm (b) 3.5 kNm (c) 4.5 kNm (d) 5.0 kNm

ZOLLEGE.in

2.5. A thick cylinder is subjected to an internal pressure of 60 MPa. If the hoop stress on the outer surface is 150 MPa, then the hoop stress on the internal surface is

(a) 105 MPa (b) 180 MPa (c) 210 MPa (d) 135 MPa

2.6. AB and CD tow uniform and identical bars of mass 10 kg each, as shown in Fig.2.6. The hinges at A and B are frictionless. The assembly is released from rest and motion occurs in the vertical plane. At the instant that the hinge B passes the point B, the angle between the two bars will be

(a) 60 degrees

(b) 37.4 degrees

(c) 30 degrees

(d) 45 degrees

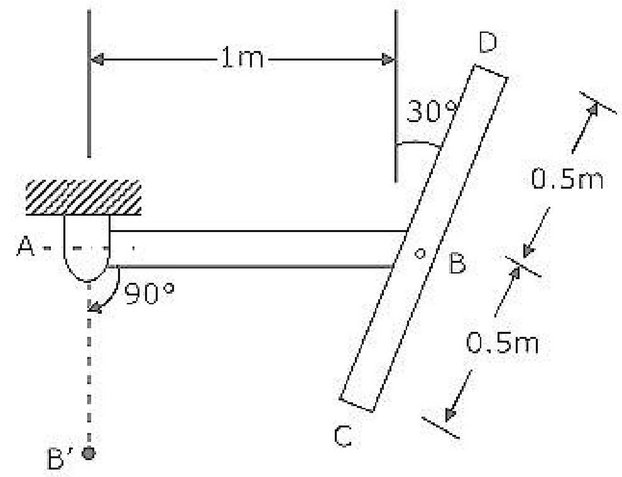

2.7. A rod of length 1 m is sliding in a corner as shown in Fig.2.7. At an instant when the rod makes an angle of 60 degrees with the horizontal plane, the velocity of point A on the rod is 1 m/s. The angular velocity of the rod at this instant.

(a) 2 rad/s

(b) 1.5 rad/s

(c) 0.5 rad/s

(d) 0.75 rad/s

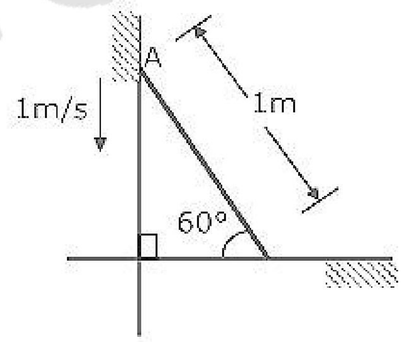

2.8. A mass of 1 kg is suspended by means of 3 springs as shown in Fig.2.8. The spring constants K_1, K_2 and K_3 are respectively 1 kN/m, 3 kN/m and 2 kN/m. The natural frequency of the system is approximately

(a) 46.90 Hz

(b) 52.44 Hz

(c) 60.55 Hz

(d) 77.46 Hz

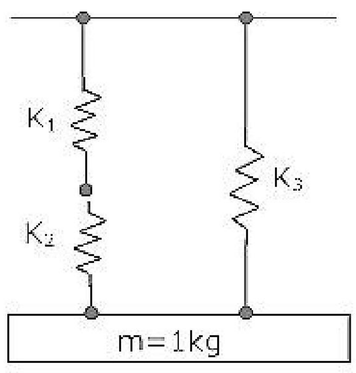

ZOLLEGE.in

2.9. A mercury manometer is sued to measure the static pressure at a point in a water pipe as shown in Fig.2.9. The level difference of mercury in the two limbs is 10 mm. The gauge pressure at that point is

(a) 1236 Pa

(b) 1333 Pa

(c) zero

(d) 98 Pa

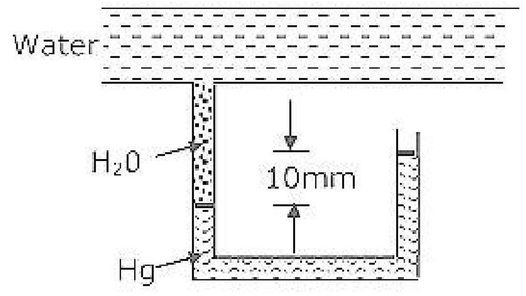

2.10. A solar energy based heat engine which receives 80 kJ of heat at 100 deg C and rejects 70 kJ of heat to the ambient at 30 deg C is to be designed. The thermal efficiency of the heat engine is

(a) 70% (b) 1.88% (c) 12.5% (d) indeterminate

2.11. For two cycles coupled in series, the topping cycle has an efficiency of 30% and the bottoming cycle has an efficiency of 20%. The overall combined cycle efficiency is:

(a) 50% (b) 44% (c) 38% (d) 55%

2.12. A steam plant has the boiler efficiency of 92%, turbine efficiency (mechanical) of 94%, generator efficiency of 95% and cycle efficiency of 44%. If 6% of the generated power is used to run the auxiliaries, the overall plant efficiency is:

(a) 34% (b) 39% (c) 45% (d) 30%

2.13. For laminar flow through a long pipe, the pressure drop per unit length increases

(a) in linear proportion to the cross-sectional area

(b) in proportion to the diameter of the pipe

(c) in inverse proportion to the cross-sectional area

(d) in inverse proportion to the square of cross-sectional area

2.14. For a current wire of 20mm diameter exposed to air ($h = 20\ W/m^2K$), maximum heat dissipation occurs when thickness of insulation ($k = 0.5\ W/mK$) is:

(a) 20 mm (b) 25 mm (c) 15 mm (d) 10 mm

2.15. Tool life of 10 hours is obtained when cutting with single point tool at 63 m/min. If Taylor's constant C = 257.35, tool life on doubling the velocity will be

(a) 5 hours (b) 25.7 min (c) 38.3 min (d) unchanged

ZOLLEGE.in

2.16. A wire of 0.1 mm diameter is drawn from a rod of 15 mm diameter. Dies giving reductions of 20%, 40% and 80% are available. For minimum error in the final size, the number of stages and reduction at each stage respectively would be

(a) 3 stages and 80% reduction for all three stages

(b) 4 stages and 80% reduction for first three stages followed by a finishing stage of 20% reduction

(c) 5 stages and reduction of 80%, 80%, 40%, 40%, 20% in a sequence

(d) None of the above

2.17. A 50 mm diameter disc is to be punched out from a carbon steel sheet 1.0 mm thick. The diameter of the punch should be

(a) 49.925 mm (b) 50.00 mm

(c) 50.075 mm (d) None of the above

2.18. In an assembly line for assembling toys, five workers are assigned tasks which take times of 10, 8, 6, 9 and 10 minutes respectively. The balance delay for the line is:

(a) 43.5% (b) 14.8% (c) 14.0% (d) 16.3%

2.19. Preliminary work sampling studies show that machine was idle 25% of the time based on a sample of 100 observations. The number of observations needed for a confidence level of 95% and an accuracy of ±5% is:

(a) 400 (b) 1200 (c) 3600 (d) 4800

2.20. The probability of a defective piece being produced in a manufacturing process is 0.01. The probability that out of 5 successive pieces, only one is defective, is

(a) $(0.99)^4(0.01)$ (b) $(0.99)(0.01)^4$

(c) $5\times(0.99)(0.01)^4$ (d) $5\times(0.99)^4(0.01)$

3. Match 4 correct pairs between List I and List II for questions 3.1 through 3.5 below. No credit will be given for partially correct matching.

3.1

List I	List II
(A) Collision of particles	(1) Euler's equation of motion
(B) Stability	(2) Minimum kinetic energy
(C) Satellite motion	(3) Minimum potential energy
(D) Spinning top	(4) Impulse-momentum principle
	(5) Conservation of moment of momentum

ZOLLEGE.in

3.2

List I	List II
(A) Fourier number	(1) Surface tension
(B) Weber number	(2) Forced convection
(C) Grashoff number	(3) Natural convection
(D) Schmidt number	(4) Radiation
	(5) Transient heat conduction
	(6) Mass diffusion

3.3

List I	List II
(A) Cetane number	(1) Ideal gas
(B) Appraoch and range	(2) Van der Waals gas
(C) $\left(\frac{\delta T}{\delta p}\right)_h \neq 0$	(3) S.I. engine
(D) dh = $C_p dT$, even when pressure varies	(4) C.I. engine
	(5) Cooling towers
	(6) Heat exchangers

3.4

List I	List II
(A) Rivets for aircraft body	(1) Forging
(B) Carburetor body	(2) Cold heating
(C) Crankshafts	(3) Aluminium-based alloy
(D) Nails	(4) Pressure die casting
	(5) Investment casting

3.5

List I	List II
(A) Welding of aluminium alloy	(1) Submerged arc welding
(B) Ship building	(2) Election beam welding
(C) Joining of HSS drill bit to carbon steel shank	(3) TIG welding
(D) Deep penetration precision welds	(4) Gas welding

ZOLLEGE.in

4. A thin cylinder of 100mm internal diameter and 5 mm thickness is subjected to an internal pressure of 10 MPa and a torque of 2000 Nm. Calculate the magnitudes of the principal stresses.

5. Two bars AB and BC are connected by a friction less hinge at B. The assembly is supported and loaded as shown in figure 5. Draw the shear force and bending moment diagrams for the combined beam AC, clearly labeling the important values. Also indicate your sign convention.

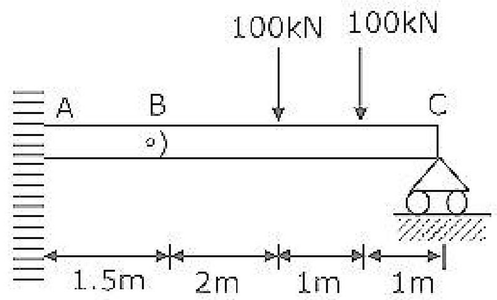

6. An iron cube at a temperature of 400 deg C is dropped into an insulated bath containing 10 kg water at 25 deg C. the water finally reaches a temperature of 50 deg C at steady state. Given that the specific heat of water is equal to 4186 J/kg K. find the entropy changes for the iron cube and the water. Is the process irreversible? If so, why?

7. Five holes of diameter 10 mm each are to be punched in a sheet 3 mm thick at a pitch of 25 mm. What should be the minimum capacity of the press (in tones) if the yield point of material is 50 MPa and

   (a) one hole is punched per stroke,

   (b) five holes are punched in a single stroke.

   Show with a neat sketch the arrangement of punches so as to avoided eccentric loading (i.e. provide balanced loading). It may be noted that no shear is provided on the punches.

8. A project requires an initial investment of Rs.5,00,000/- and returns of Rs.2,00,000/- at the end of each year for 5 year with no terminal salvage. What is the undiscounted payback period for the project? If the interest rate is 20%, compute the discounted payback period.

SECTION – B

Attempt ANY TEN questions. Answers must be given in the answer book provided. Answer for each question must start on a fresh page and must appear at one place only. (Answers to all parts of a question must appear together).

9. Design a helical spring for a maximum compression load of 1200 N and a deflection of 30 mm. The permissible shear stress in the spring material is 400 MPa and the modulus of rigidity is 80 Gpa.

   Take the spring index C as 5 and the What's factor, $K = \frac{4C-1}{4C-4} + \frac{9,615}{C}$

ZOLLEGE.in

10. A power screw moves a nut against a force of 10 kN at a speed of 6 mm/s. The screw has a single square thread of 6 mm pitch on a major diameter of 45-mm. Calculate the power of the driving motor. The coefficient of friction at the screw thread is 0.15.

11. A simply supported beam is subjected to a single force P at a distance 'b' from one of the supports. Obtain the expression for the deflection under the load using Castigliano's theorem. How do you calculate deflection at the mid-point the beam?

12. Figure 12 below show a planetary gear train. Gears 2, 4 and 5 have 24, 40 and 144 teeth respectively. Gear 5 is fixed. Gear 2 is rotating clockwise at 700 rpm. What will be the rpm of the arm and gear 4?

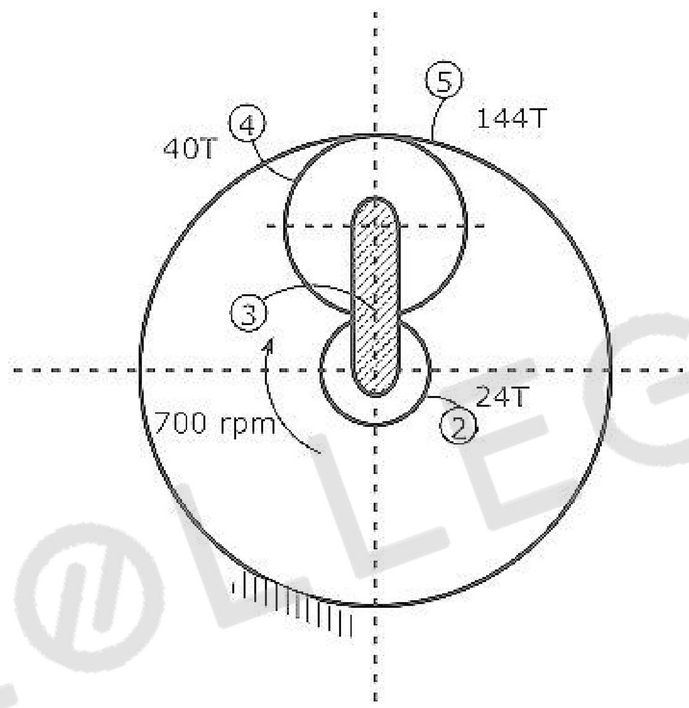

13. A cylinder of mass 1 kg and radius 1 m is connected by two identical springs at a height of 0.5 m above the center as shown in Fig.13. The cylinder rolls without sliping. If the spring constant is 30 kN/m for each spring, find the natural frequency of the system for small oscillations.

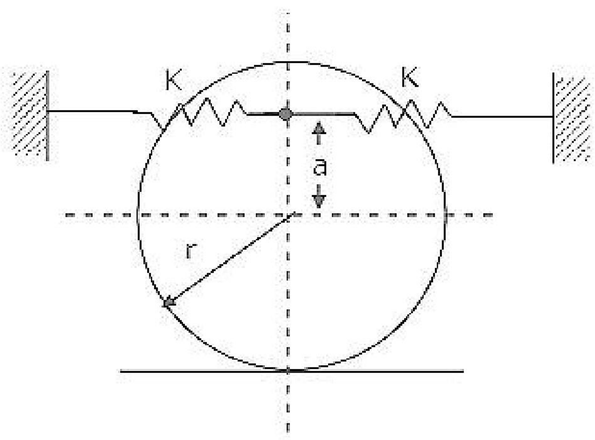

14. A bar AB is hinged to a fixed support at A and the centre of a uniform disc at B. Both hinges are frictionless. At a certain instant, the system is observed to be moving in the horizontal plane, when for the bar has an angular velocity ω while

ZOLLEGE.in

disc has an angular velocity of ω relative to the bar. The bar and the disc are each of mass m. determine

(a) the angular momentum of the bar about the hinge A

(b) the angular momentum of the disc about the hinge A

(c) the kinetic energy of the system.

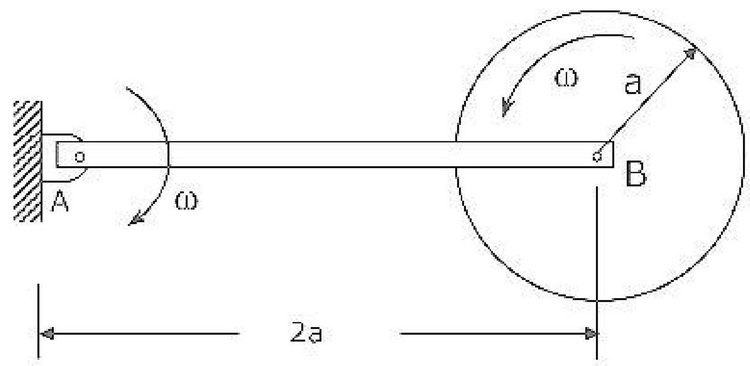

15. A four cylinder, four stroke S.I. engine has a compression ratio of 8 and bore of 100 mm, with stroke equal to the bore. The volumetric efficiency of each cylinder is equal to 75%. The engine operates at a speed of 4800 rpm, with an air-fuel ratio of 15.

Given that the calorific value of fuel = 42 MJ/kg, atmospheric air density = 1.12 kg/m^2, mean effective pressure in the cylinder = 10 bar and mechanical efficiency of the engine = 80%, determine the indicated thermal efficiency and the brake power.

16. The velocity of steam exiting the nozzles of the impulse stage of a turbine is 400 m/s. the blades operate close to the maximum blading efficiency. The nozzle angle is 20°. Considering equiangular blades and neglecting blade friction, calculate for a steam flow of 0.6 kg/s, the diagram power and the diagram efficiency.

17. Air enters the compressor of a gas turbine plant operating on Brayton cycle at 1 bar, 27°C. the pressure ratio in the cycle is 6. If $W_r = 2.5W_c$, where W_r and W_c are the turbine and compressor work respectively. Calculate the maximum temperature and the cycle efficiency.

18. In a simple vapour compression cycle, following are the properties of the refrigerant R-12 at various points:

Compressor inlet	:	$h_1 = 183.2 kJ/kg,$	$v_1 = 0.0767 m^3/kg$
Compressor discharge	:	$h_2 = 222.6 kJ/kg,$	$v_2 = 0.0164 m^3/kg$
Condenser exit	:	$h_3 = 84.9 kJ/kg,$	$v_3 = 0.00083 m^3/kg$

The piston displacement volume for the compressor is 1.5 litres per stroke and its volumetric efficiency is 80%. The speed of the compressor is 1600 rpm. Find

(a) power rating of the compressor (kW)

(b) refrigerating effect (kW).

ZOLLEGE.in

19. Show that in a double-pipe counter flow heat exchangers if $m_h c_h = m_c C_c$, the temperature profiles of the two fluids along its length are parallel straight lines.

20. In a hydroelectric station, water is available at the rate of 175 m^3/s under a head of 18m. the turbines run at a speed of 150 rpm with overall efficiency of 82%. Find the number of turbines required if they have the maximum specific speed of 460.

21. Fifty flat pieces 1 mm thick and initial dimensions as shown in Fig.21 (a) are to be milled in a single cut to the final dimension shown in Fig.(b) using end milling. If the cutter of diameter 25 mm has 10 teeth and rotates at 100 rpm, find

(a) the maximum uncut chip thickness if the horizontal feed of the table is 10 mm/min, assuming single tooth in contact.

(b) the material removal rate.

(c) the maximum torque if the yield strength of the material is 150 MPa.

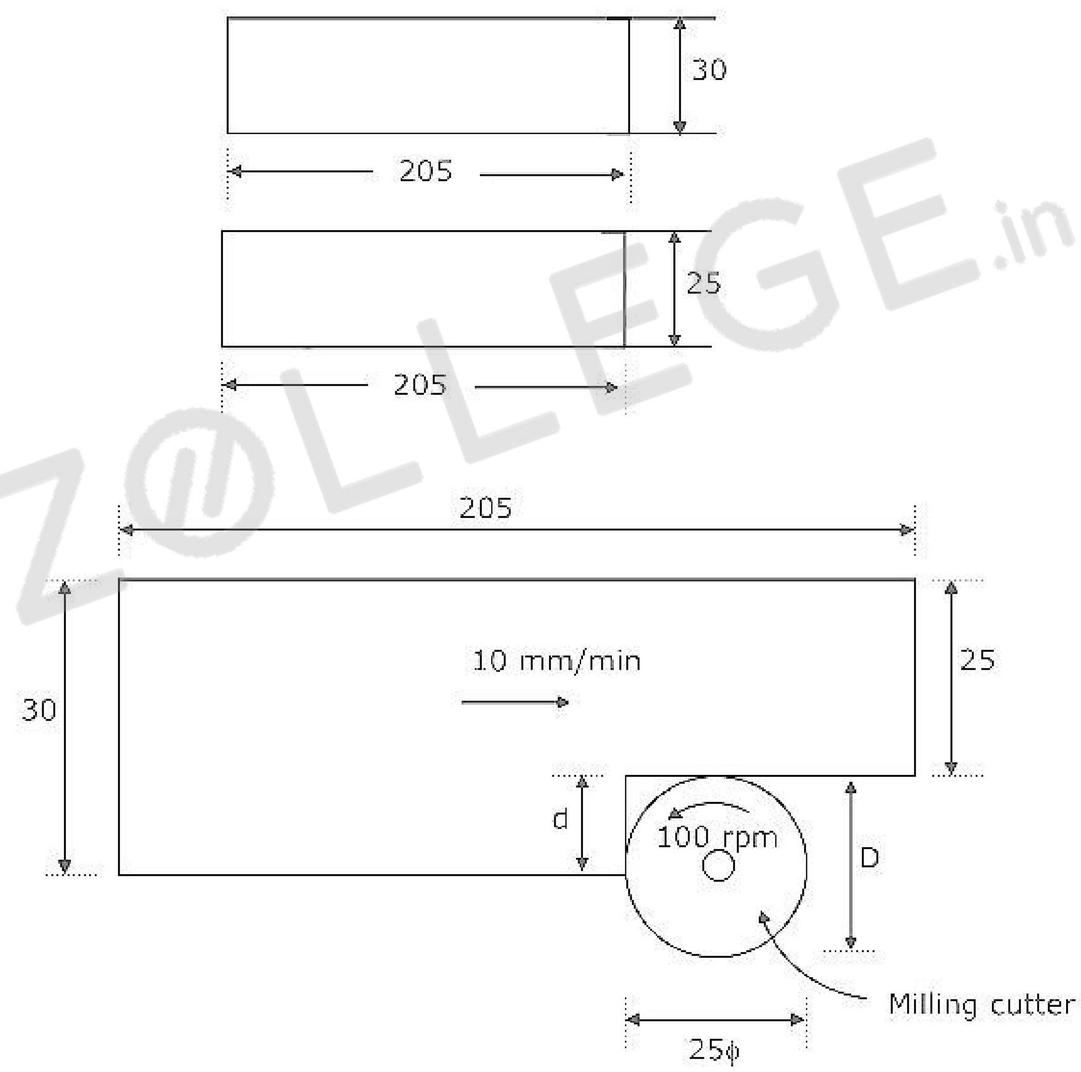

22. The pouring basin in a sand mould is 200 mm in diameter and 100 mm in height. The mould cavity is a cube of 125 mm side and must be filled in 25 seconds. The maximum velocity must ensure laminar flow into the mould cavity and in the gates of circular cross-section. Design the sprue to avoid aspiration effects.

Assume

(i) a constant temperature

(ii) no loss in the velocity head, and

ZOLLEGE.in

(iii) diameter of gate = 8 times the diameter at the sprue base.

Properties of molten metal : kinematic viscosity = 0.9 mm^2/s,

Density = 7000 kg/m^3, and

$c_p = 33.6 J$ / mole-K.

23. (a) A steel cup of height 30 mm and internal diameter 40 mm, with a flange of width 10 mm is to be deep drawn from a sheet 1 mm thick. Determine the diameter of the blank and the drawing force. What is the draw ratio? Can the cup be drawn in a single operation?

The properties of steel are:

Yield point = 150 MPa, Ultimate tensile strength = 350 MPa,Limiting draw ratio = 1.9.

Neglect entry radius and blank holder effects.

(b) A cube of 5 mm side is loaded as shown in Fig.23

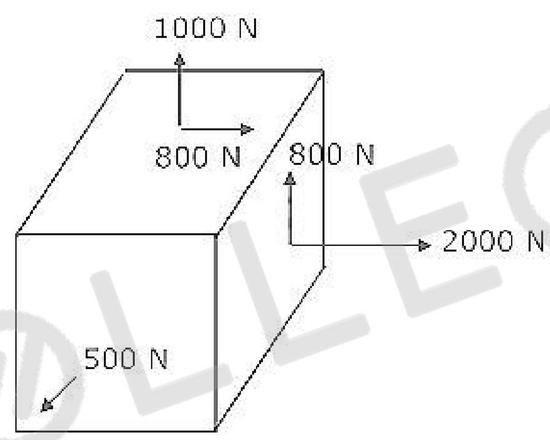

(i) Determine the principal stresses σ_1, σ_2 and σ_3

(ii) Will the cube yield if the yield strength of the material is 70 MPa? Use Von Mises theory.

24. The cross-section of weld bead is shown in Fig.24. The profile of the bead and the fusion zone are taken circular for convenience. Bead width and radii of curvature of circular profiles are given in the figure. Calculate

(a) the bead height

(b) penetration, and

(c) dilution (%).

All dimensions in Fig.24 are in mm.

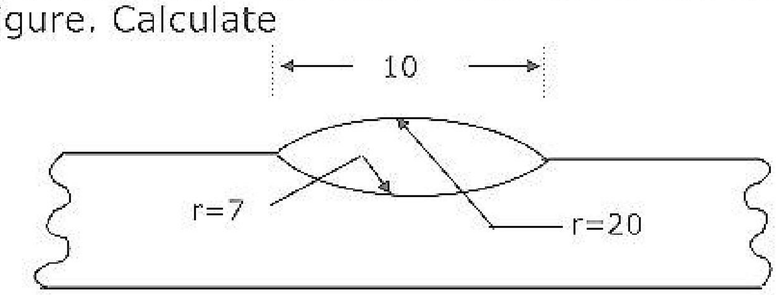

ZOLLEGE.in

25. Fig. 25 shows the 3-wire method of inspecting screw threads. Assuming ISO metric threads of size M16 with pitch =2mm and effective diameter = 14.701 mm, determine the over write measurement S when the diameter of the roller used for the measurement is 1.155 mm. The diameter of the roller corresponds to the best wire size for which the roller touches the thread flanks at points located along the effective diameter.

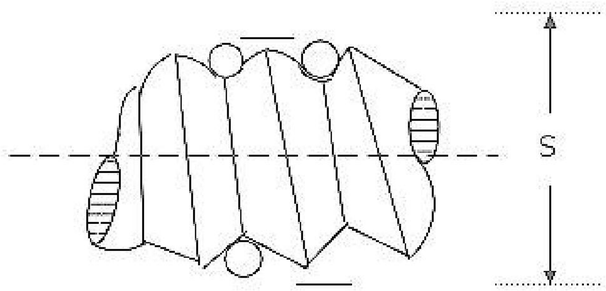

26. Alloy steel forged gear blank shown in Fig.26 (a) is to be machined to produce precision spur gear with a module of 5 mm. The finished gear is shown in Fig.26 (b). Write down the operation sequence to machine this component assuming a medium batch size of 300 gears. The operations should be listed in proper sequence as 1, 2, 3, ...

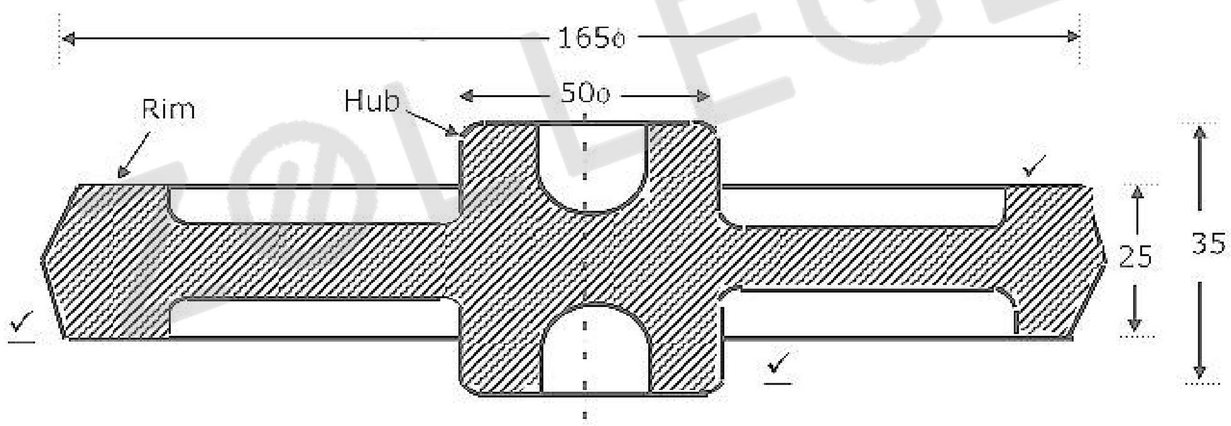

Fig.(a)

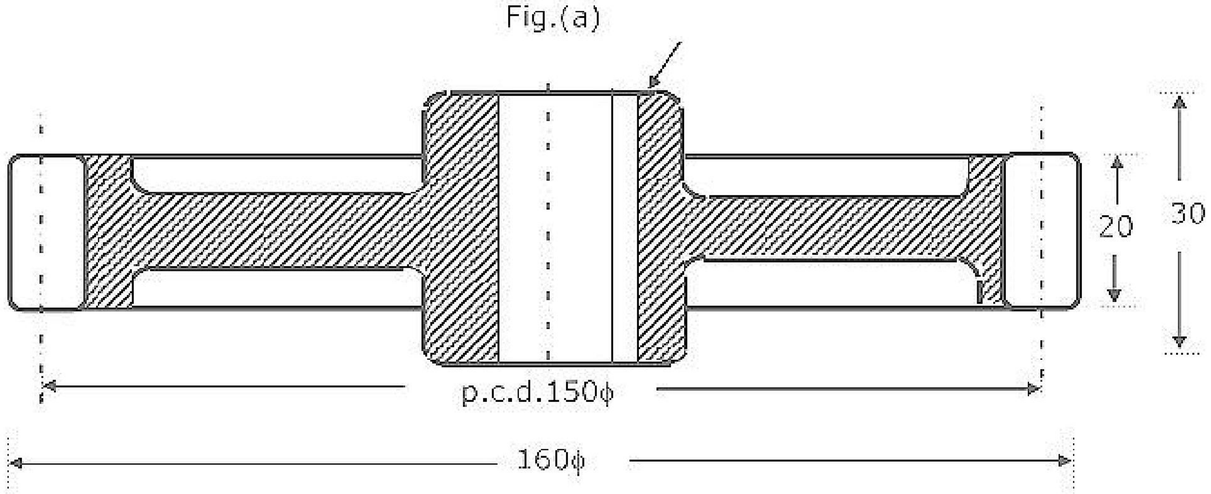

Fig.(b)

All dimensions in mm

ZOLLEGE.in

27. A job shop incurs a cost of Rs.60/- per day for each day a job is in the shop. At the beginning of a month there are five jobs in the shop with the following data:

Job	1	2	3	4	5
Processing time (day)	5	3	8	2	6
Due date (days)	10	12	20	9	8

Which schedule will minimize the total cost? What is the minimum total cost? Which jobs (if any) fail to meet their due dates?

28. The product structure of product P is shown in Fig.28. The assembly of 2 units of B and 3 units of C to produce 1 unit of A takes 1 week. The ordering lead times for B, C and d are 2, 1 and 2 weeks respectively. The Master Schedule for produce P is as follows:

Week	6	7	8
Demand	20	10	50

Determine the net requirements of item C if the initial inventory of A, B, C and D is 10, 20, 15 and 50 respectively. Also, determine the ordering schedule under a lot for lot ordering policy.

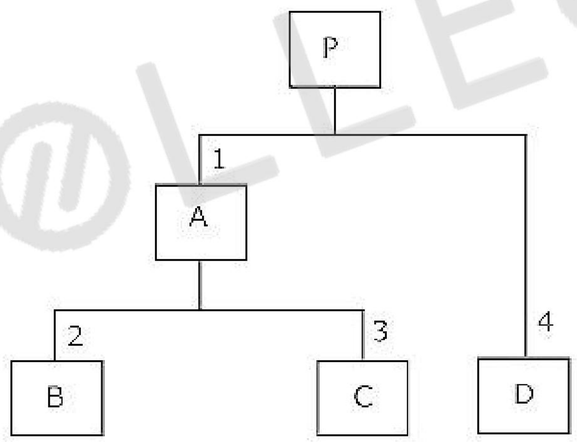

ZOLLEGE.in