SECTION – A (75 marks)

1. This question consists of TWENTY-FIVE sub-questions (1.1 – 1.25) of ONE mark each. For each of these sub-questions, four possible alternatives (A,B, C and D) are given, out of which ONLY ONE is correct. Indicate the correct answer by darkening the appropriate bubble against the question number on the left hand side of the Objective Response Sheet (ORS). You may use the answer book provided for any rough work, if needed.

1.1 The dependent current source shown in Figure 1.1

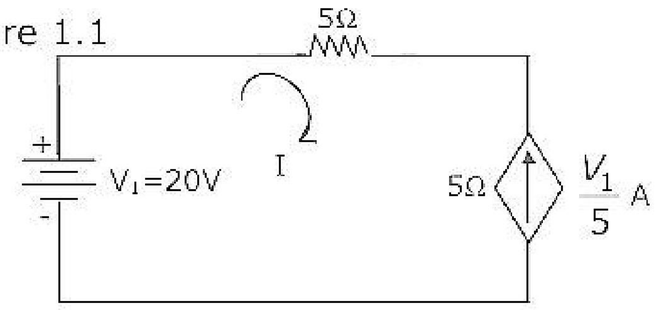

(a) delivers 80 W

(b) absorbs 80 W

(c) delivers 40 W

(d) absorbs 40 W

1.2 In figure 1.2, the switch was closed for a long time before opening at t = 0. the voltage Vx at $t = 0^+$ is

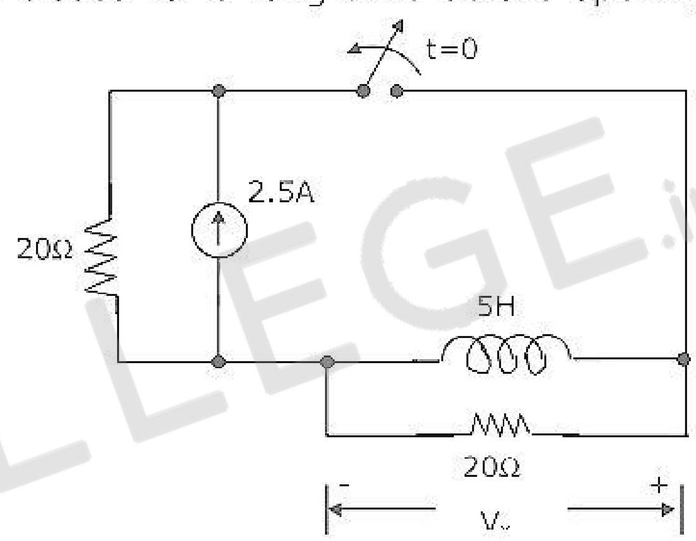

(a) 25 V

(b) 50 V

(c) -50 V

(d) 0 V

1.3 Convolution of x(t + 5) with impulse function δ(t – 7) is equal to

(a) x(t - 12) (b) x(t + 12) (c) x(t - 2) (d) x(t + 2)

1.4 Which of the following cannot be the Fourier series expansion of a periodic signal?

(a) x(t) = 2cos t + 3 cos 3t

(b) x(t) = 2cos πt + 7 cos t

(c) x(t) = cos t + 0.5

(d) x(t) = 2cos 1.5πt + sin 3.5 πt

1.5 In Figure 1.5, a silicon is carrying a constant current of 1 mA. When the temperature of the diode is 20°C, V_D is found to be 700 mV. If the temperature rises to 40°C, V_D becomes approximately equal to

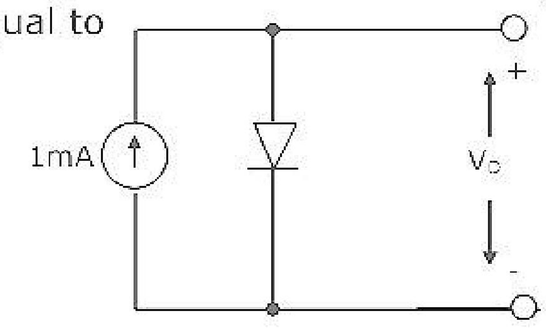

(a) 740 mV

(b) 660 mV

(c) 680 mV

(d) 700 mV

ZOLLEGE.in

1.6 In a negative feedback amplifier using voltage-series (i.e. voltage-sampling series mixing) feedback. (R_i and R_o denote the input and output resistance respectively)

(a) R_i decreases and R_o decreases
(b) R_i decreases and R_o increases
(c) R_i increases and R_o decreases
(d) R_i increases and R_o increases

1.7 A 741-type op-amp has a gain-bandwidth product of 1 MHz. A non-inverting amplifier using this op-amp and having a voltage gain of 20 dB will exhibit a 3-dB bandwidth of

(a) 50 KHz
(b) 100 KHz
(c) $\frac{1000}{17}$ KHz
(d) $\frac{1000}{7.07}$

1.8 Three identical RC-coupled transistor amplifiers are cascaded. If each of the amplifiers has a frequency response as shown in Figure 1.8, the overall frequency response is as given in

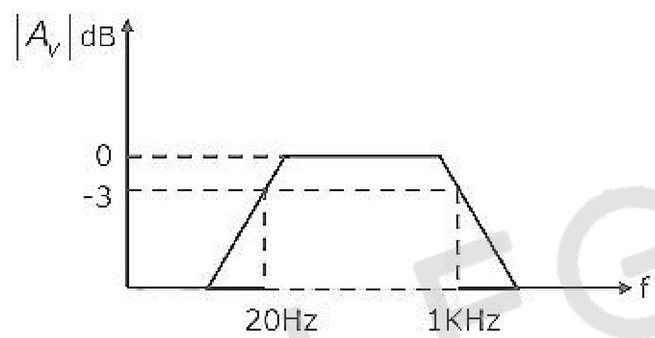

(a)
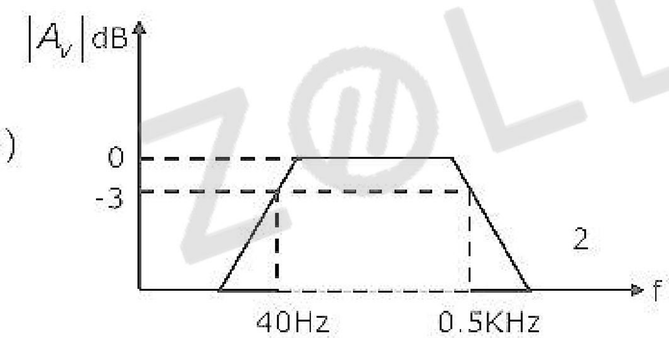

(b)
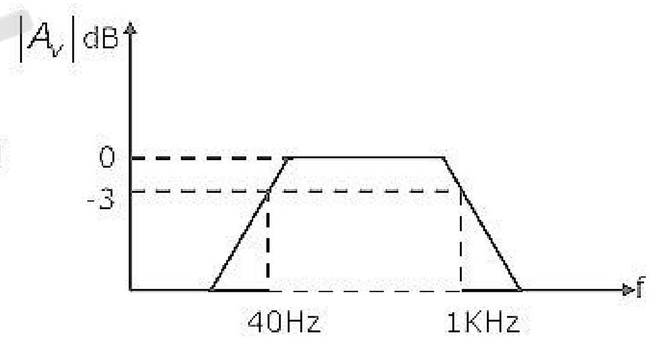

(c)
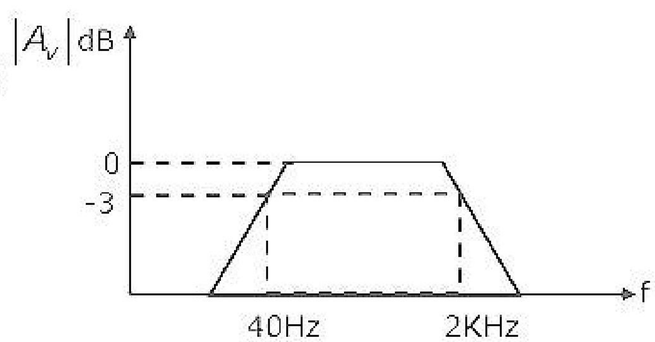

(d)
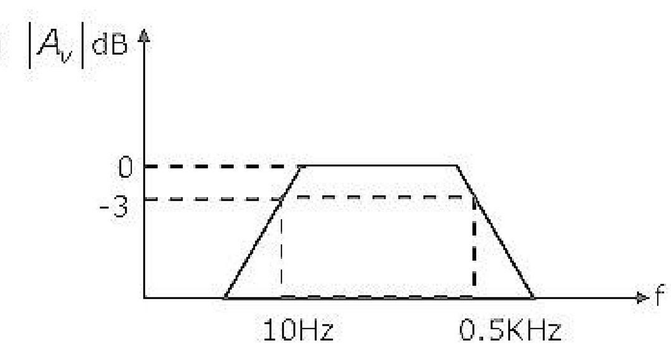

1.9 4-bit 2's complement representation of a decimal number is 1000. The number is

(a) +8
(b) 0
(c) -7
(d) -8

ZOLLEGE.in

1.10 If the input to the digital circuit (Figure 1.10) consisting of a cascade of 20 XOR-gates is X, then the output Y is equal to

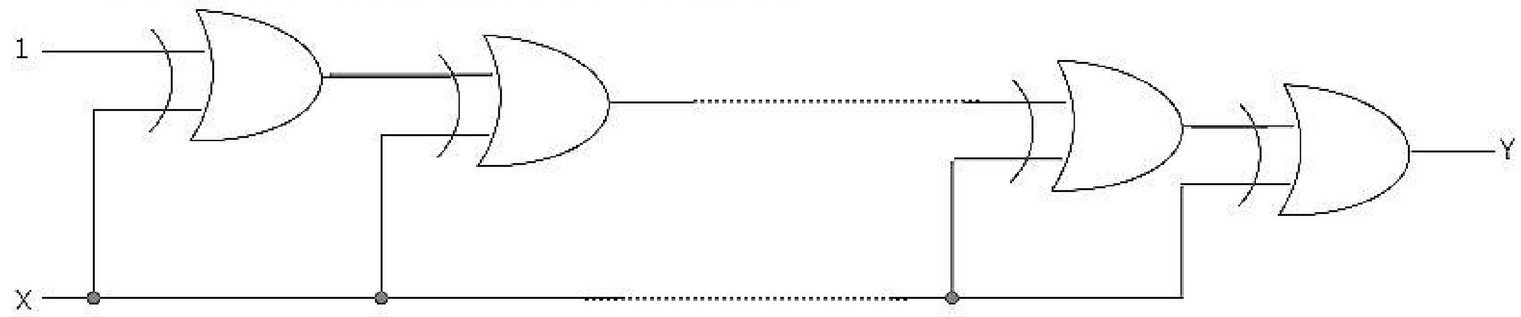

(a) 0 (b) 1 (c) $\overline{X}$ (d) X

1.11 The number of comparators required in a 3-bit comparator type ADC is

(a) 2 (b) 3 (c) 7 (d) 8

1.12 If the transistor in Figure 1.12 is in saturation, then

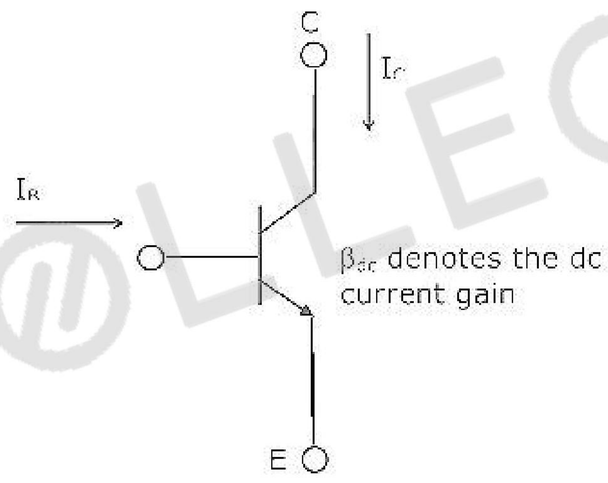

(a) I_C is always equal to $\beta_{dc}I_B$ (b) I_C is always equal to $-\beta_{dc}I_B$

(c) I_C is greater than or equal to $\beta_{dc}I_B$ (d) I_C is less than or equal to $\beta_{dc}I_B$

1.13 Consider a system with the transfer function $G(s) = \dfrac{s+6}{ks^2+s+6}$. Its damping ratio will be 0.5 when the value of k is

(a) $\frac{2}{6}$ (b) 3 (c) $\frac{1}{6}$ (d) 6

1.14 Which of the following points is NOT on the root locus of a system with the open loop transfer function $G(s)H(s) = \dfrac{k}{s(s+1)(s+3)}$

(a) $s = -j\sqrt{3}$ (b) s= - 1.5 (c) s= -3 (d) $s = -\infty$

ZOLLEGE.in

1.15 The phase margin of a system with the open-loop transfer function $G(s)H(s) = \frac{(1-s)}{(1+s)(2+s)}$ is

(a) 0° (b) 63.4° (c) 90° (d) ∞

1.16 The transfer function $Y(s)U(s)$ of a system described by the state equations x(t) = -2x(t) + 2u(t) and y(t) = 0.5x(t) is

(a) $\frac{0.5}{(s-2)}$ (b) $\frac{1}{(s-2)}$ (c) $\frac{0.5}{(s+2)}$ (d) $\frac{1}{(s+2)}$

1.17 The Fourier transform $F\{e^{-1}u(t)\}$ is equal to $\frac{1}{1+j2\pi f}$. Therefore, $F\left\{\frac{1}{1+j2\pi t}\right\}$ is

(a) $e^{f}u(f)$ (b) $e^{-f}u(f)$ (c) $e^{f}u(-f)$ (d) $e^{-f}u(-f)$

1.18 A linear phase channel with phase delay T_P and group delay T_g must have

(a) $T_P = T_g$=constant (b) $T_P \propto f$ and $T_g \propto f$

(c) T_P = constant and $T_g \propto f$ (d) $T_P \propto f$ and T_g =constant

1.19. A 1 MHz sinusoidal carrier is amplitude modulated by a symmetrical square wave of period 100μsec. Which of the following frequencies will NOT be present in the modulated signal?

(a) 990 KHz (b) 1010 KHz (c) 1020 KHz (d) 1030 KHz

1.20. Consider a sampled signal $y(t) = 5\times10^{-6}x(t)\sum_{n=-\infty}^{+\infty}\delta(t-nT_s)$ where x(t) =10 cos($8\pi\times10^3$)t and T_s =100μsec. When y(t) is passed through an ideal low-pass filter with a cutoff frequency of 5KHz, the output of the filter is

(a) $5\times10^{-6}\cos(8\pi\times10^3)t$ (b) $5\times10^{-5}\cos(8\pi\times10^3)t$

(c) $5\times10^{-1}\cos(8\pi\times10^3)t$ (d) $10\cos(8\pi\times10^3)t$

1.21. For a bit-rate of 8 Kbps, the best possible values of the transmitted frequencies in a coherent binary FSK system are

(a) 16 KHz and 20 KHz (b) 20 KHz and 32 KHz

(c) 20 KHz and 40 KHz (d) 32 KHz and 40 KHz

1.22. The line-of-sight communication requires the transmit and receive antenna to face each other. If the transmit antenna is vertically polarized, for best reception the receive antenna should be

(a) horizontally polarized (b) vertically polarized

ZOLLEGE.in

(c) at 45° with respect to horizontal polarization

(d) at 45° with respect to vertical polarization

1.23. The VSWR can have any value between

(a) 0 and 1 (b) -1 and +1 (c) 0 and ∞ (d) 1 and ∞

1.24. In an impedance Smith chart, a clockwise movement along a constant resistance circle gives rise to

(a) a decrease in the value of reactance

(b) an increase in the value of reactance

(c) no change in the reactance value

(d) no change in the impedance value

1.25 The phase velocity for the TE_{10}-mode in an air-filled rectangular waveguide is (c is the velocity of plane waves in free space)

(a) less than c (b) equal to c

(c) greater than c (d) none of the above

2. This question consists of TWENTY-FIVE sub-questions (2.1 – 2.25) of TWO marks each. For each of these sub-questions, four possible alternatives (A,B, C and D) are given, out of which ONLY ONE is correct. Indicate the correct answer by darkening the appropriate bubble against the question number on the left hand side of the Objective Response Sheet (ORS). You may use the answer book provided for any rough work, if needed.

2.1 In the network of Figure 2.1, the maximum power is delivered to R_L if its value is

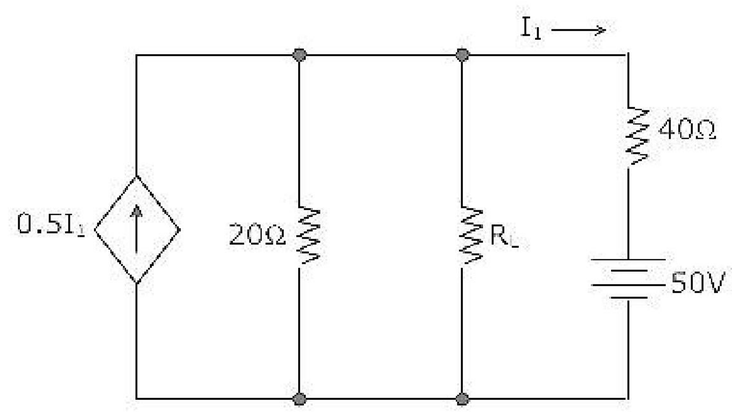

(a) 16Ω (b) $\frac{40}{3}\Omega$ (c) 60Ω (d) 20Ω

ZOLLEGE.in

2.2. If the 3-phase balanced source in Figure 2.2 delivers 1500 W at a leading power factor of 0.844, then the value of Z_L (in ohm) is approximately

(a) $90\angle 32.44°$

(b) $80\angle 32.44°$

(c) $80\angle -32.44°$

(d) $90\angle -32.44°$

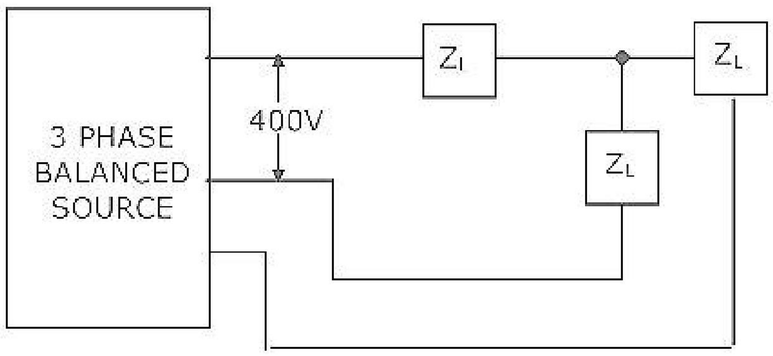

2.3. The Laplace transform of a continuous-time signal x(t) is $X(s) = \dfrac{5-s}{s^2-s-2}$. If the Fourier transform of this signal exists, then x(t) is

(a) $e^{2t}u(t) - 2e^{-t}u(t)$

(b) $-e^{2t}u(-t) + 2e^{-t}u(t)$

(c) $-e^{2t}u(-t) - 2e^{-t}u(t)$

(d) $e^{2t}u(-t) - 2e^{-t}u(t)$

2.4. If the impulse response of a discrete-time system is $h[n] = -5^n u[-n-1]$, then the system function H(z) is equal to

(a) $\dfrac{-z}{z-5}$ and the system is stable

(b) $\dfrac{z}{z-5}$ and the system is stable

(c) $\dfrac{-z}{z-5}$ and the system is unstable

(d) $\dfrac{z}{z-5}$ and the system is unstable

2.5. An amplifier using an opamp with a slew-rate SR = 1V/μsec has a gain of 40 dB. If this amplifier has to faithfully amplify sinusoidal signals from dc to 20 KHz without introducing any slew-rate induced distortion, then the input signal level must not exceed.

(a) 795 mV (b) 395 mV (c) 79.5 mV (d) 39.5 mV

ZOLLEGE.in

2.6. The circuit in Figure 2.6 employs positive feedback and is intended to generate sinusoidal oscillation. If at a frequency $f_0 B(f) = \Delta \frac{V_f(f)}{V_0(f)} = \frac{1}{6}\angle 0°$, then to sustain oscillation at this frequency

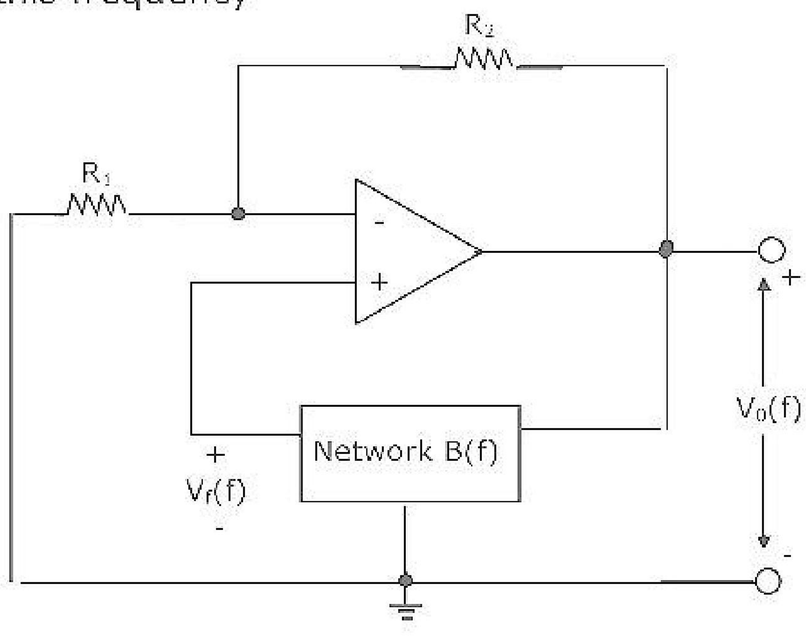

(a) $R_2 = 5R_1$ (b) $R_2 = 6R_1$ (c) $R_2 = \frac{R_1}{6}$ (d) $R_2 = \frac{R_1}{5}$

2.7. A zener diode regulator in Figure 2.7 is to be designed to meet the specifications: I_L = 10 mA, V_0 = 10 V and V_{in} varies from 30 V to 50 V. The zener diode has $V_z = 10V$ and I_{zk} (knee current) = 1 mA. For satisfactory opertion

(a) R ≤ 1800Ω

(b) 2000Ω ≤ R ≤ 2200Ω

(c) 3700Ω≤R≤4000Ω

(d) R>4000Ω

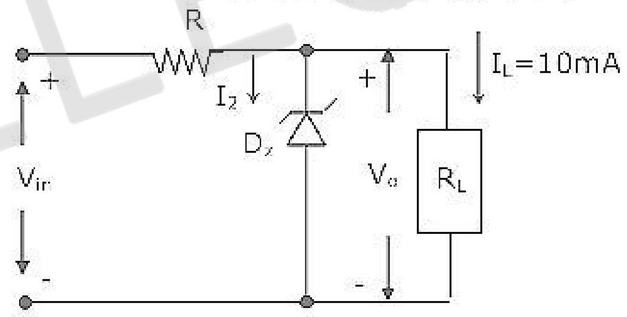

2.8. The voltage gain $A\Delta = \frac{V_o}{V_i}$ of the JFET amplifier shown in Figure 2.8 is

(a) +18

(b) -18

(c) +6

(d) -6

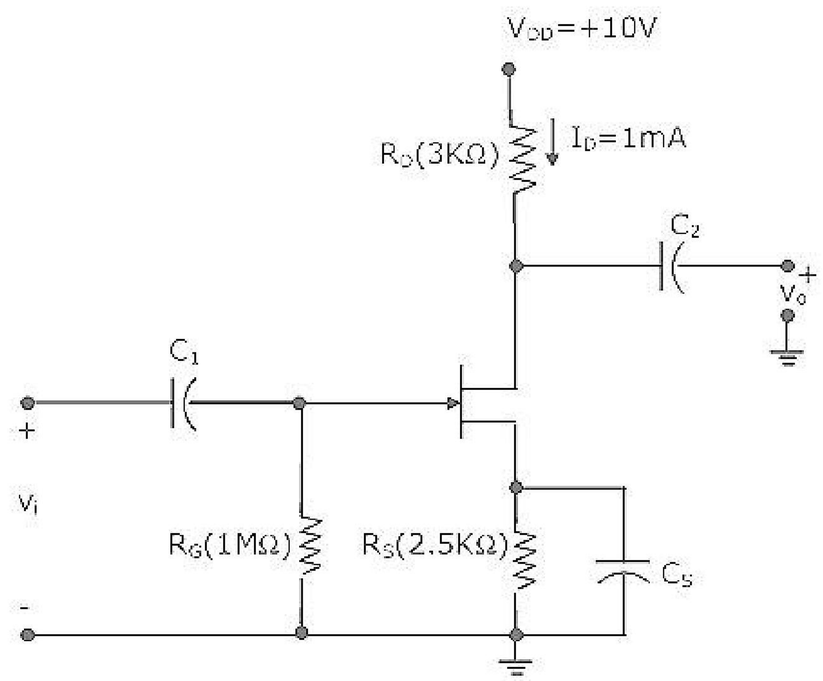

ZOLLEGE.in

2.9. The gates G_1 and G_2 in Figure 2.9 have propagation delays of 10 nsec and 20 nsec respectively. If the input V_i makes an abrupt change from logic 0 to 1 at time $t = t_0$ then the output waveform V_0 is

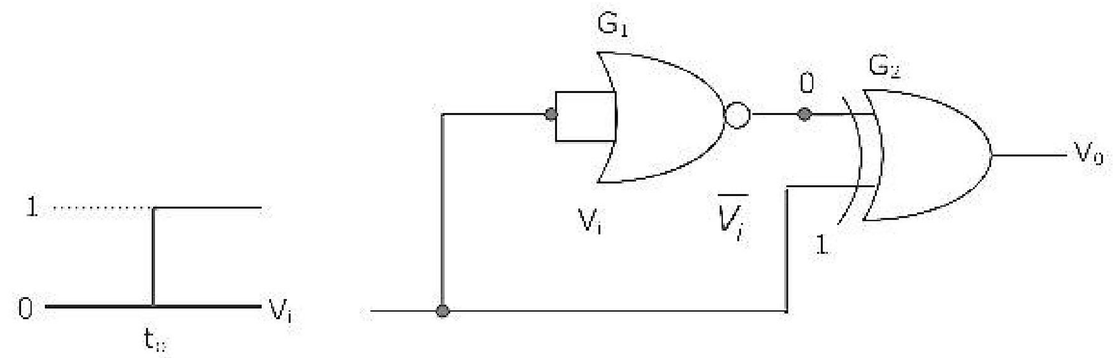

(a) (b)

(c) (d)

2.10. The circuit in Figure 2.10 has two CMOS NOR gates. This circuit functions as a:

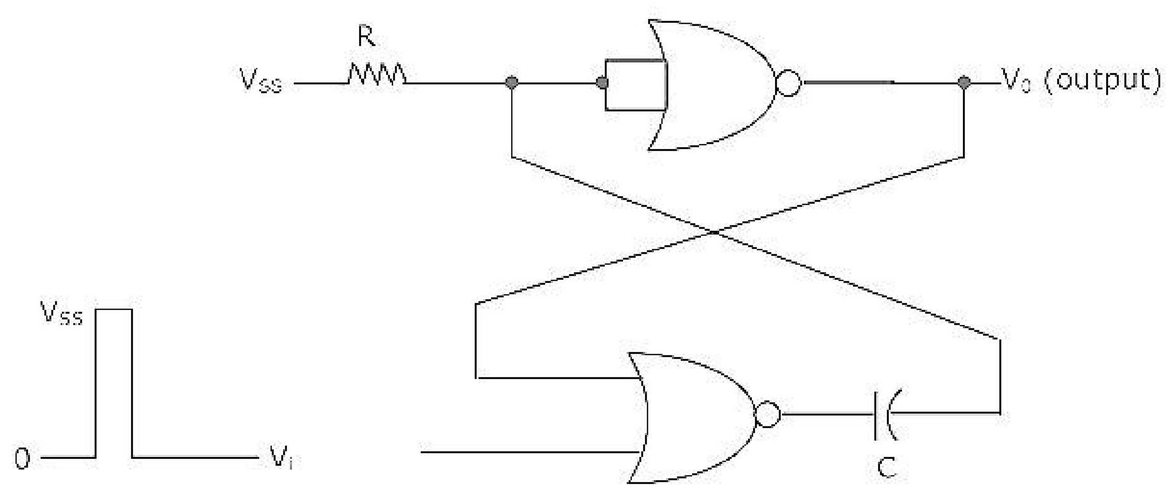

(a) flip flop (b) Schmitt trigger

(c) Monostable multivibrator (d) Astable multivibrator

ZOLLEGE.in

2.11. Consider the following statements in connection with the CMOS inverter in Figure 2.11 where both the MOSFETs are of enhancement type and both have a thresh old voltage of 2V.

Statement 1: T_1 conducts when Vi ≥ 2V.

Statement 2: T_1 is always in saturation when V_0 = 0V.

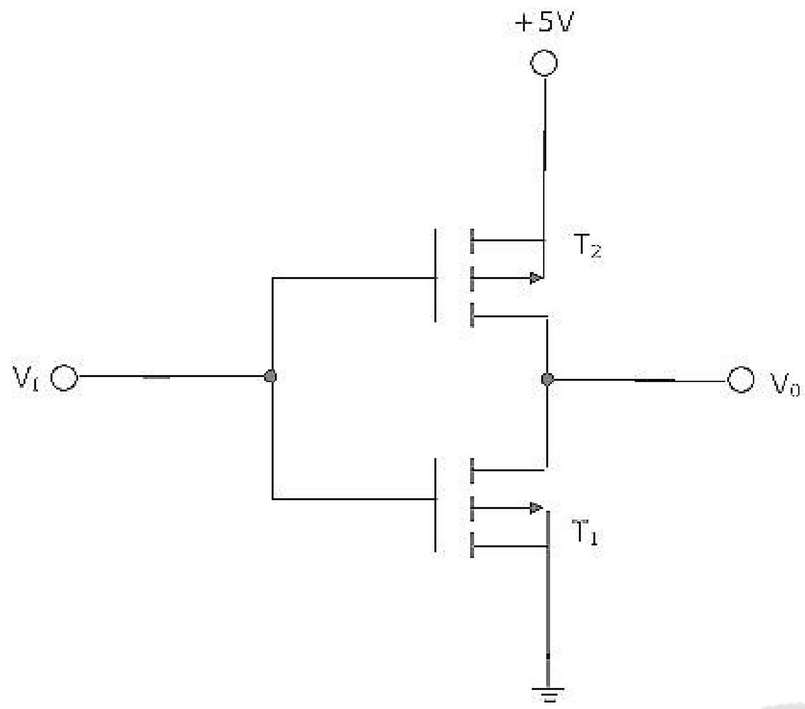

Which of the following is correct?

(a) Only Statement 1 is TRUE
(b) Only Statement 2 is TRUE
(c) Both the statements are TRUE
(d) Both the statements are FALSE

2.12. If the input X_3, X_2, X_1, X_0 to the ROM in figure 2.12 are 8-4-2-1 BCD numbers, then the outputs $Y_3 Y_2 Y_1 Y_0$ are

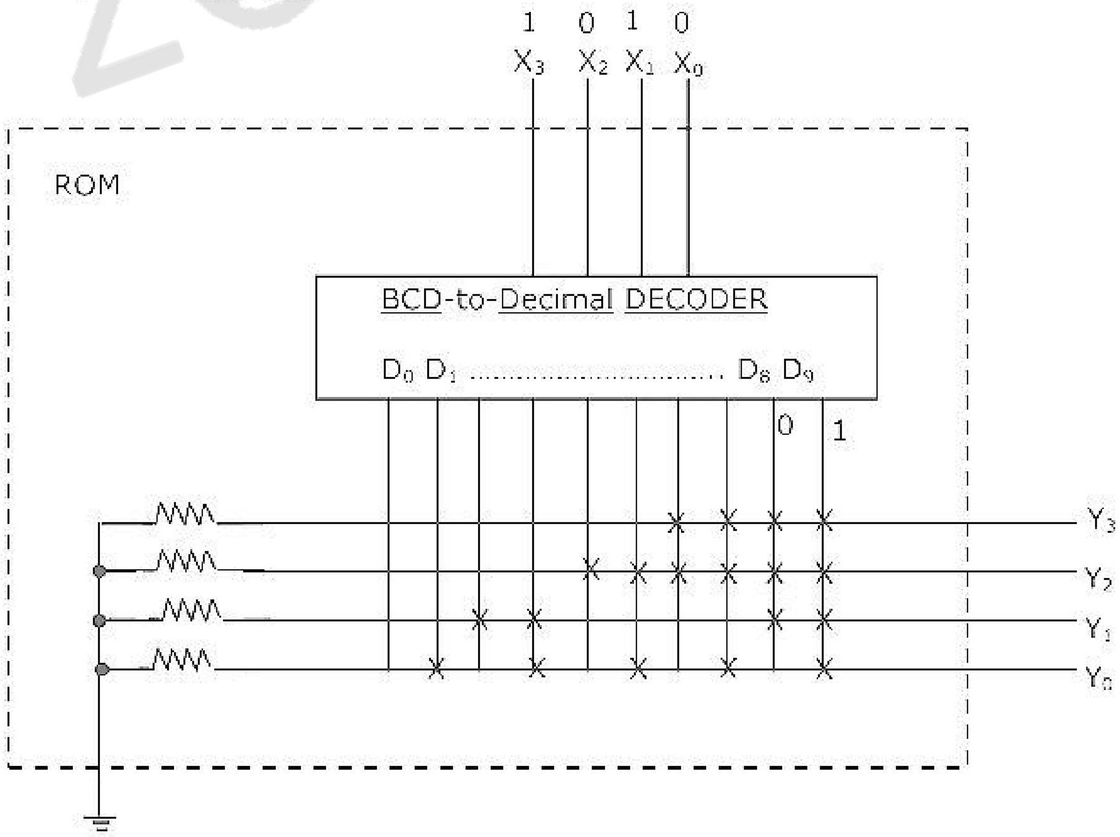

(a) gray code numbers
(b) 2-4-2-1 BCD numbers
(c) excess 3 code numbers
(d) none of the above

ZOLLEGE.in

2.13. Consider the following assembly language program.

```
        MVI     B,87H
        MOV     A,B
START:  JMP     NEXT
        MVI     B,00H
        XRA     B
        OUT     PORT1
        HLT
NEXT:   XRA     B
        JP      START
        OUT     PORT2
        HLT
```

The execution of the above program in an 8085 microprocessor will result in

(a) an output of 87H at PORT1

(b) an output of 87H at PORT2

(c) infinite looping of the program execution with accumulator data remaining at 00H

(d) infinite looping of the program execution with accumulator data alternating between 00H and 87H

2.14. The system shown in Figure 2.14 remains stable when

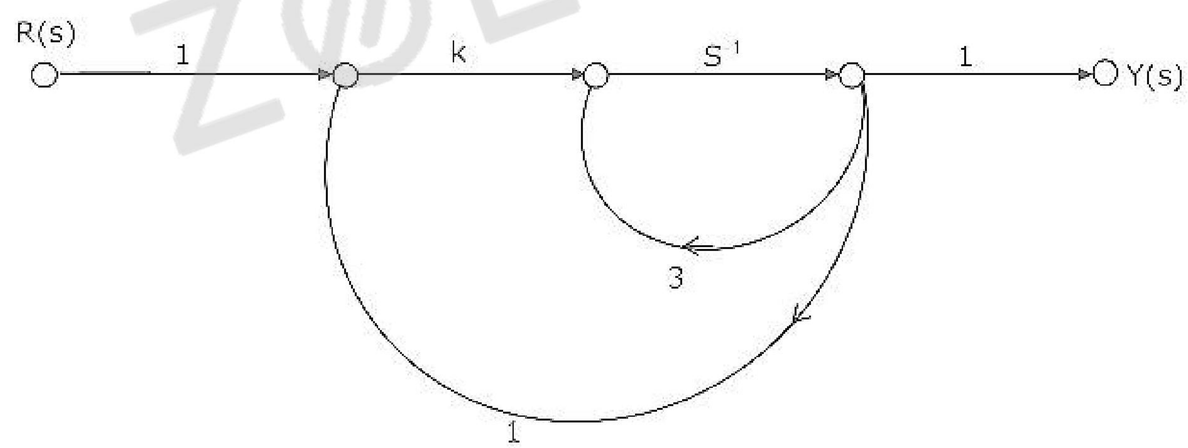

(a) $k < -1$ (b) $-1 < k < 1$ (c) $1 < k < 3$ (d) $k > 3$

2.15. The transfer function of a system is $G(s) = \dfrac{100}{(s+1)(s+100)}$. For a unit step input to the system the approximate settling time for 2% criterion is

(a) 100 sec (b) 4 sec (c) 1 sec (d) 0.01 sec

ZOLLEGE.in

2.16. The characteristic polynomial of a system is $q(s) = 2s^5 + s^4 + 4s^3 + 2s^2 + 2s + 1$. The system is

(a) stable (b) marginally stable (c) unstable (d) oscillatory

2.17. The system with the open loop transfer function $G(s)H(s) = \dfrac{1}{s(s^2+s+1)}$ has a gain margin of

(a) - 6 dB (b) 0 dB (c) 3.5 dB (d) 6 dB

2.18. An angle modulated signal is given by

$s(t) = \cos 2\pi\left(2\times10^6 t + 30\sin 150t + 40\cos 150t\right)$.

The maximum frequency and phase deviations of s(t) are

(a) 10.5 KHz, 140π rad (b) 6 KHz, 80π rad

(c) 10.5 KHz, 100π rad (d) 7.5 KHz, 100π rad

2.19. In figure 2.19 $m(t) = \dfrac{2\sin 2\pi t}{t}$, $s(t) = \cos 200\pi t$ and $n(t) = \dfrac{\sin 199\pi t}{t}$. The output y(t) will be

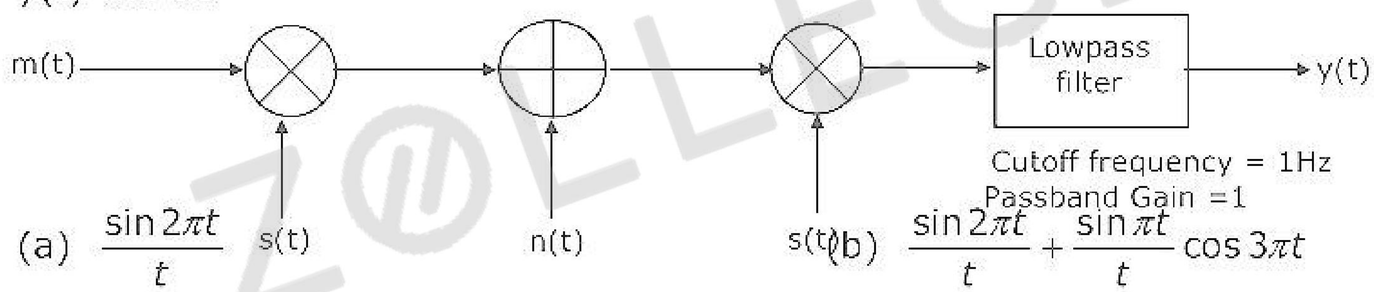

(a) $\dfrac{\sin 2\pi t}{t}$ (b) $\dfrac{\sin 2\pi t}{t} + \dfrac{\sin \pi t}{t}\cos 3\pi t$

(c) $\dfrac{\sin 2\pi t}{t} + \dfrac{\sin 0.5\pi t}{t}\cos 1.5\pi t$ (d) $\dfrac{\sin 2\pi t}{t} + \dfrac{\sin \pi t}{t}\cos 0.75\pi t$

2.20. A signal x(t) = 100 cos(24π×10³)t is ideally sampled with a sampling period of 50 μsec and then passed through an ideal low-pass filter with cutoff frequency of 15 KHz. Which of the following frequencies is/are present at the filter output?

(a) 12 KHz only (b) 8 KHz only

(c) 12 KHz and 9 KHz (d) 12 KHz and 8 KHz

2.21. If the variance σ_x^2 of $d(n) = x(n) - x(n-1)$ is one-tenth the variance σ_x^2 of a stationary zero mean discrete time signal x(n), then the normalized autocorrelation function $\dfrac{R_{xx}(k)}{\sigma_x^2}$ at k = 1 is

(a) 0.95 (b) 0.90 (c) 0.10 (d) 0.05

ZOLLEGE.in

2.22. A plane wave is characterized by $\overline{E} = \left(0.5\hat{x} + \hat{y}e^{\frac{j\pi}{2}}\right)e^{j\omega t - jkz}$. This wave is

(a) linearly polarized
(b) circularly polarized
(c) elliptically polarized
(d) unpolarized

2.23. Distilled water at 25° C is characterized by $\sigma = 1.7 \times 10^{-4}$ mho/m and $\epsilon = 78\epsilon_0$ at a frequency of 3 GHz. Its loss tangent tan δ is ($\epsilon = 10^{-9}/(36\pi)$F/m)

(a) 1.3×10^{-5}
(b) 1.3×10^{-3}
(c) $1.7 \times 10^{-4}/78$
(d) $1.7 \times 10^{-4}/(78\epsilon_0)$

2.24. The electric field on the surface of a perfect conductor is 2 V/m. The conductor is immersed in water with $\epsilon = 80\epsilon_0$. The surface charge density on the conductor is ($\epsilon = 10^{-9}/(36\pi)$F/m)

(a) 0 C/m^2
(b) 2 C/m^2
(c) 1.8×10^{-11} C/m^2
(d) 1.14×10^{-9} C/m^2

2.25. A person with a receiver is 5 Km away from the transmitter. What is the distance that this person must move further to detect a 3-dB decrease in signal strength?

(a) 942 m
(b) 2070 m
(c) 4978 m
(d) 5320 m

SECTION – B (75 Marks)

This section consists of TWENTY questions (EC3-EC22) of FIVE marks each. Attempt ANY FIFTEEN questions. Answers must be given in the answer book provided. Answer for each question must start on a fresh page and must appear at one place only. (Answers to all parts of a question must appear together).

3. The switch in Figure 3 has been in position 1 for a long time and is then moved to position 2 at t = 0.

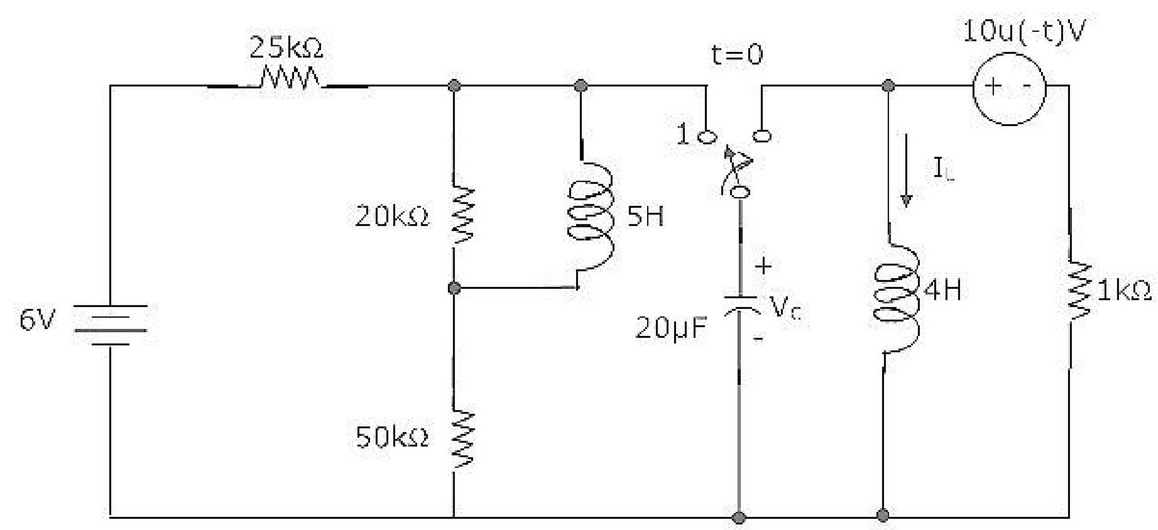

(a) Determine $V_C(0^+)$ and $I_L(0^+)$
(b) Determine $\frac{dV_C(t)}{dt}$ at $t = 0^+$
(c) Determine $V_C(t)$ for $t > 0$

ZOLLEGE.in

4. For the network shown in Figure 4, R = 1 KΩ, L_1 = 2H, L_2= 5H, L_3 = 1H, L_4 = 4H and C = 0.2 μF. The mutual inductances are M_{12} = 3H and M_{34} = 2H. Determine

(a) the equivalent inductance for the combination of L_3 and L_4.

(b) the equivalent inductance across the points A and B in the network.

(c) the resonant frequency of the network.

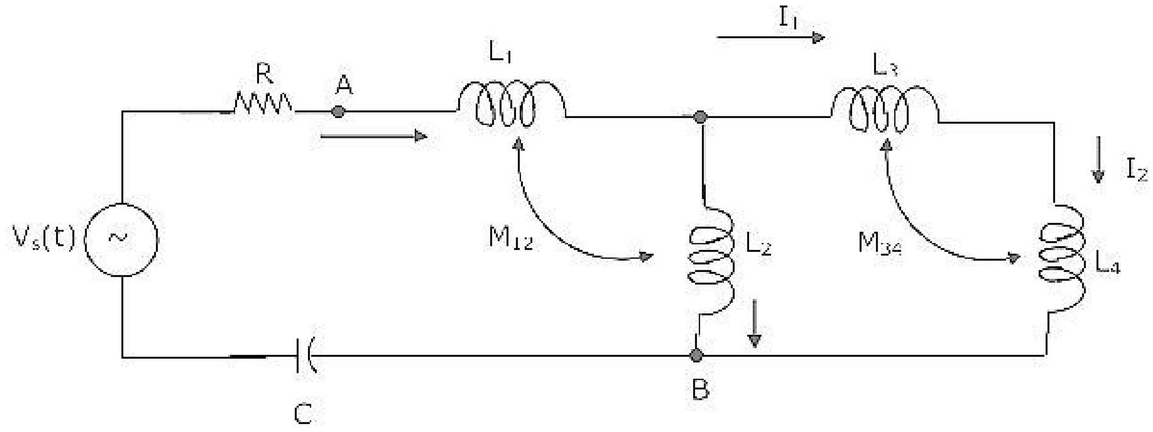

5. Consider the network in Figure 5.

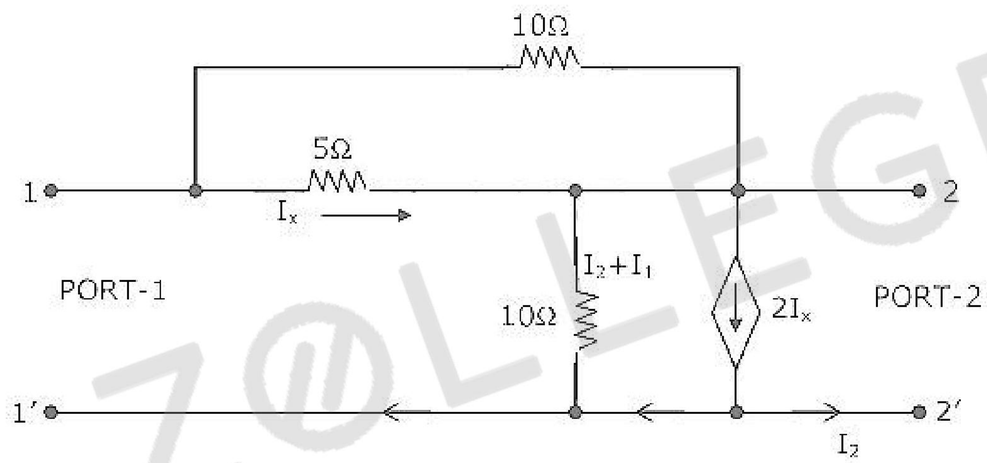

(a) Find its short-circuit admittance parameters.

(b) Find the open-circuit impedance Z_{22}.

6. A triangular voltage waveform $V_i(t)$ figure 6(a) is applied at the input to the circuit of Figure 6(b). Assume the diodes to be ideal.

(a) Determine the output $V_0(t)$.

(b) Neatly sketch the output waveform superimposed on the input $V_i(t)$ and label the key points.

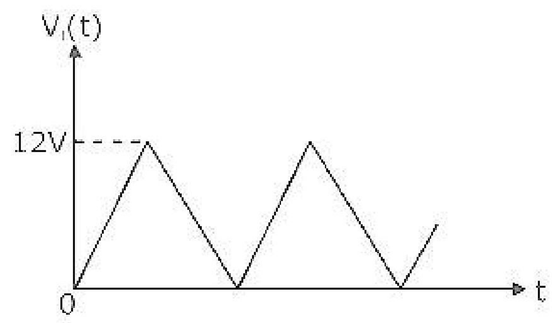

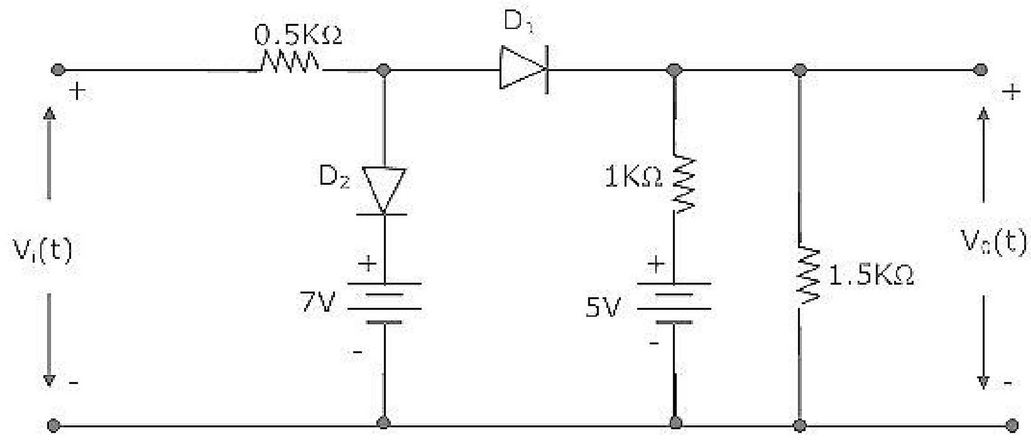

ZOLLEGE.in

7. Figure 7 shows a 2-stage amplifier. The transistors Q1 and Q2 are identical with current gain β = 100; further $\beta_{dc} = \beta_{ac} = \beta$. The Zener diode D_z has a break down voltage V_z= 10.7 volt. Assume that D_z is in breakdown region and its dynamic resistance r_z is zero. The capacitors C1 and C2 are large and provide negligible impedance at signal frequencies.

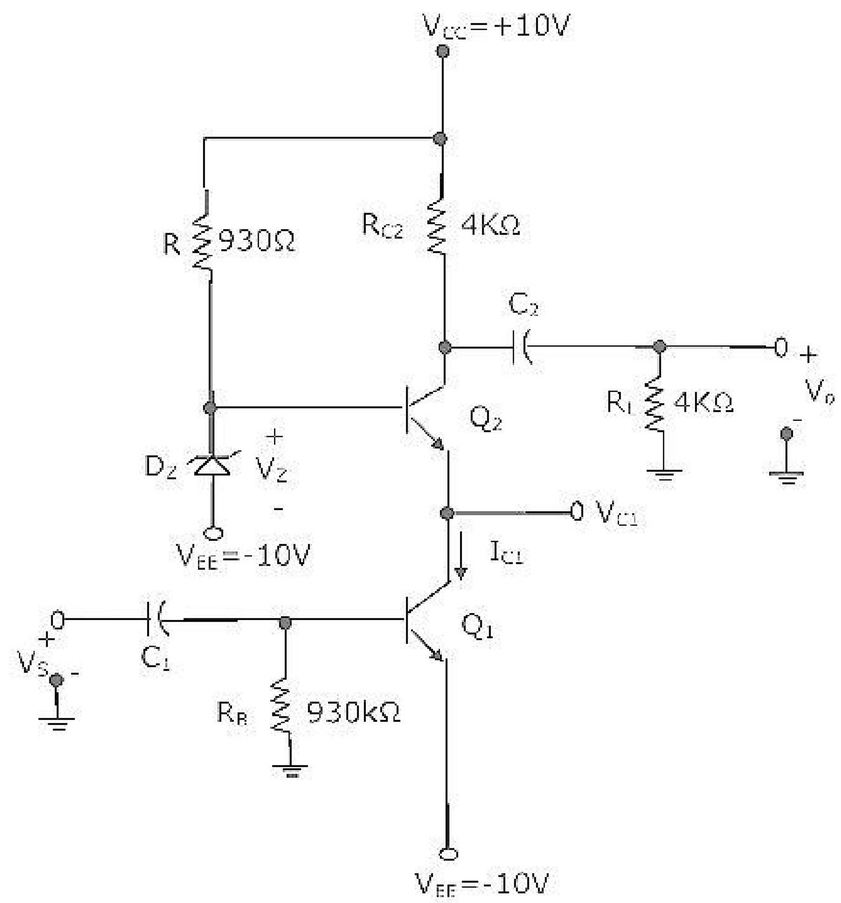

(a) Identify the configuration in each of the amplifier stages (i.e., whether CE, CC, CB etc.)

(b) Determine the quiescent quantities I_{C1} and V_{C1}.

(c) Derive an expression for the voltage gain $A_V \triangle \frac{V_0}{V_s}$ and determine its value.

(Assume V_{BE} = 0.7V, $r_0=\infty$ and Thermal voltage V_T = 25 mV)

8. Consider the circuit of Figure 8. The op-amp used is ideal.

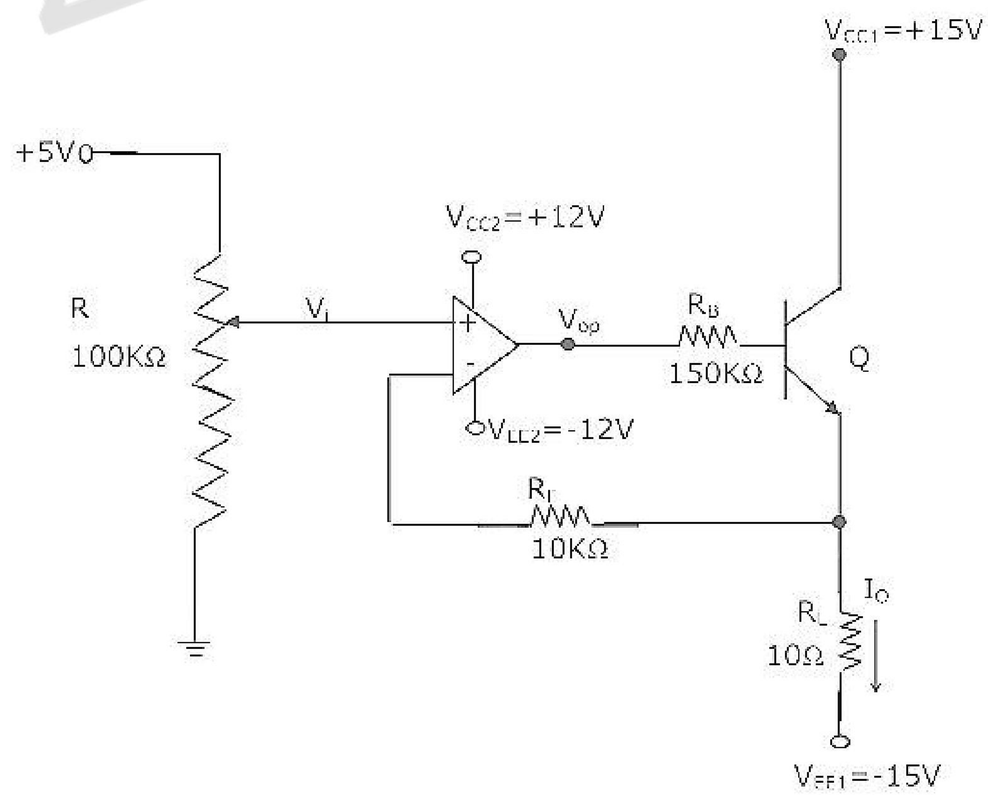

ZOLLEGE.in

(a) In which mode is the BJT operating (i.e. active, saturation or cutoff)? Justify your answer.

(b) Obtain an expression relating the output current I_0 and the input voltage V_i.

(c) Determine I_0 and V_{0P} if V_i = 2 Volt (V_{0P}:output of opamp)
(Assume β = 99 and V_{BE} = 0.7 V)

9. The inputs to a digital circuit shown in Figure 9(a) are the external signals A, B and C.

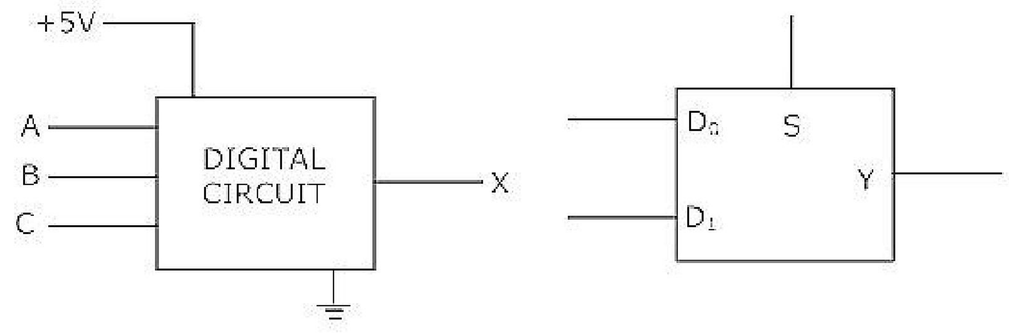

Table 9

S	Y
0	D_0
1	D_1

($\overline{A}, \overline{B}$ and $\overline{C}$ are not available). The +5V power supply (logic 1) and the ground (logic 0) are also available. The output of the circuit is $X = \overline{A}B + \overline{A}\,\overline{B}\,\overline{C}$.

(a) Write down the output function in its canonical SOP and POS forms.

(b) Implement the circuit using only two 2:1 multiplexers shown in Figure 9(b), where S is the data-select line, D_0 and D_1 are the input data lines and Y is the output lines. The function table for the multiplexer is given in table 9.

10. Each transistor in Figure 10 has dc current gain β_{dc} = 50, cut-in voltage V_γ = 0.65V and $V_{BE,\,sat}$ = 0.75 V. The output voltage V_0 for T_2 in saturation can be as high as 0.2 V. Assume 0.7 V drop across a conducting p-n junction. Determine?

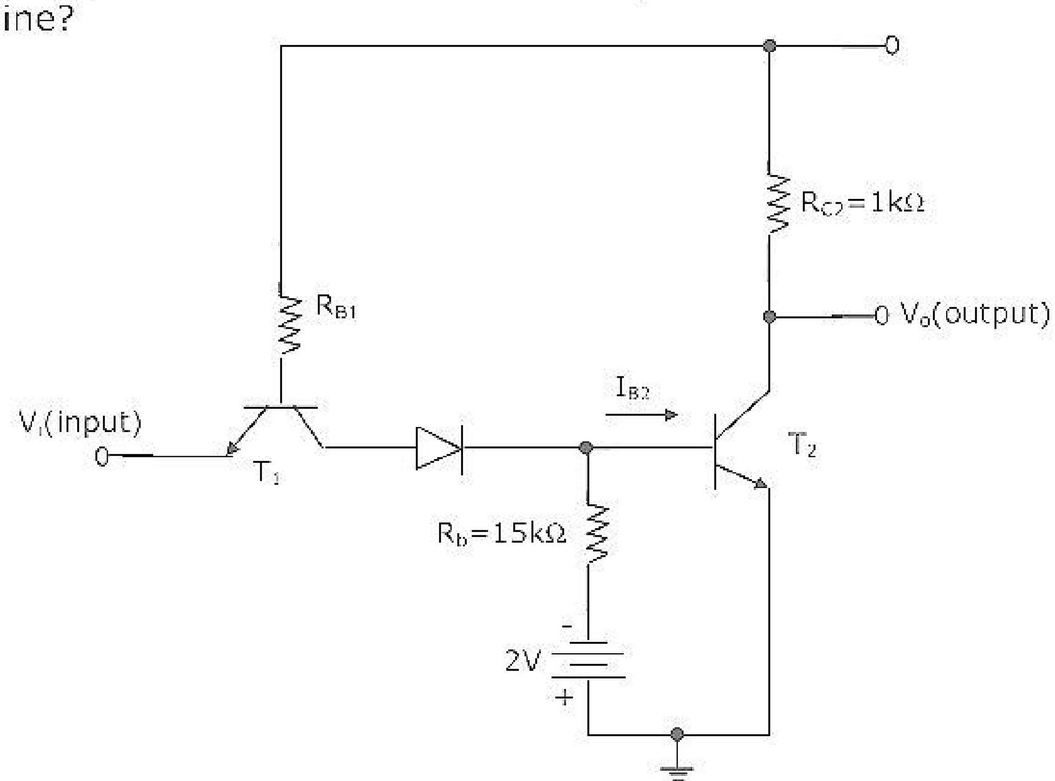

ZOLLEGE.in

(a) the minimum value I_{B2} necessary to keep T_2 saturation.

(b) the maximum permissible value for the resistance R_{B1}.

(c) the worst-case high input (logic 1) and the worst-case low input (logic 0) for which T_2 will be either in saturation or in cut off.

11. It is required to design a binary mod-5 synchronous counter using AB flip-flops such that the output $Q_2Q_1Q_0$ changes as 000 → 001 → 010 ..... and so on. The excitation table for the AB flip-flop is given in table 11.

(a) Write down the state table for the mod-5 counter.

(b) Obtain simplified SOP expressions for the inputs A_2, B_2, A_1, B_1, A_0 and B_0 in terms of Q_2, Q_1, Q_0 and their complements.

(c) Hence, complete the circuit diagram for the mod-5 counter given in Figure 11 using minimum number of 2-input NAND-gate only.

A	B	Q_{n+1}
0	0	1
0	1	$\overline{Q}_n$
1	0	Q_n
1	1	0

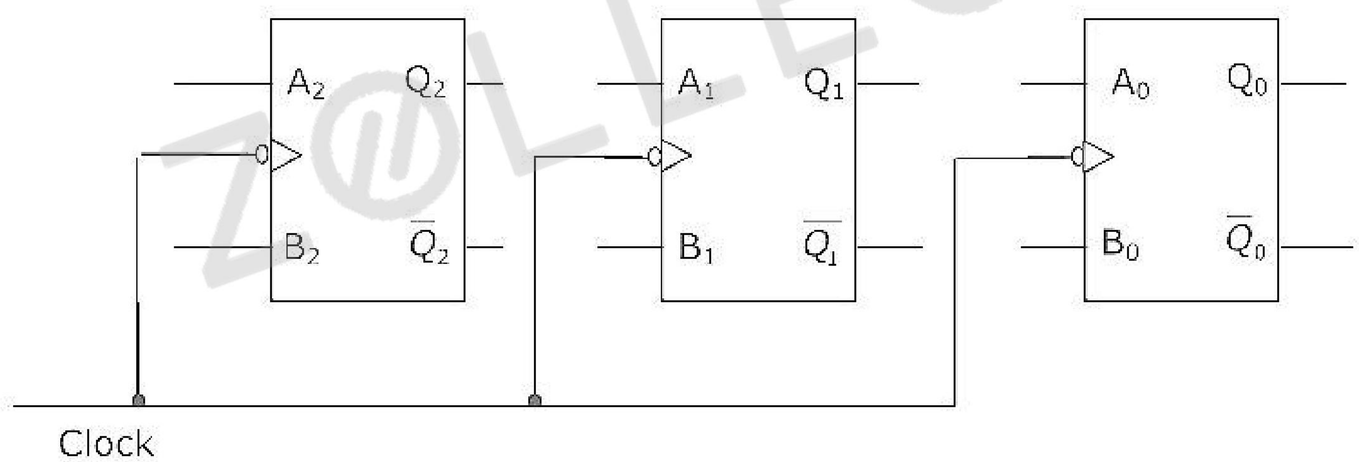

12. An 8085 microprocessor operating at 5 MHz clock frequency execute the following routine.

```
START    MOVE    A,B
         OUT     55H
         DCR     B
         STA     FFF8H
         JMP     START
```

(a) Determine the total number of machine cycles required to execute this routine till the JMP instruction is executed for the first time.

(b) Determine the time interval between two consecutive $\overline{MEMW}$ signals.

ZOLLEGE.in

(c) If the external logic controls the READY line so that three WAIT states are introduced in the I/O WRITE machine cycle, determine the time interval between two consecutive $\overline{MEMW}$ signals.

13. A unity feedback system has the plant transfer function $G_p(s) = \dfrac{1}{(s+1)(2s+1)}$

(a) Determine the frequency at which the plant has a phase lag of 90°

(b) An integral controller with transfer function $G_c(s) = \dfrac{k}{s}$ is placed in the feed-forward path of the feedback system. Find the value of k such that the compensated system has an open-loop gain margin of 2.5.

(c) Determine the steady state errors of the compensated system to unit-step and unit-ramp inputs.

14. The Nyquist plot of an all-pole second order open-loop system is shown in Figure 14. Obtain the transfer function of the system.

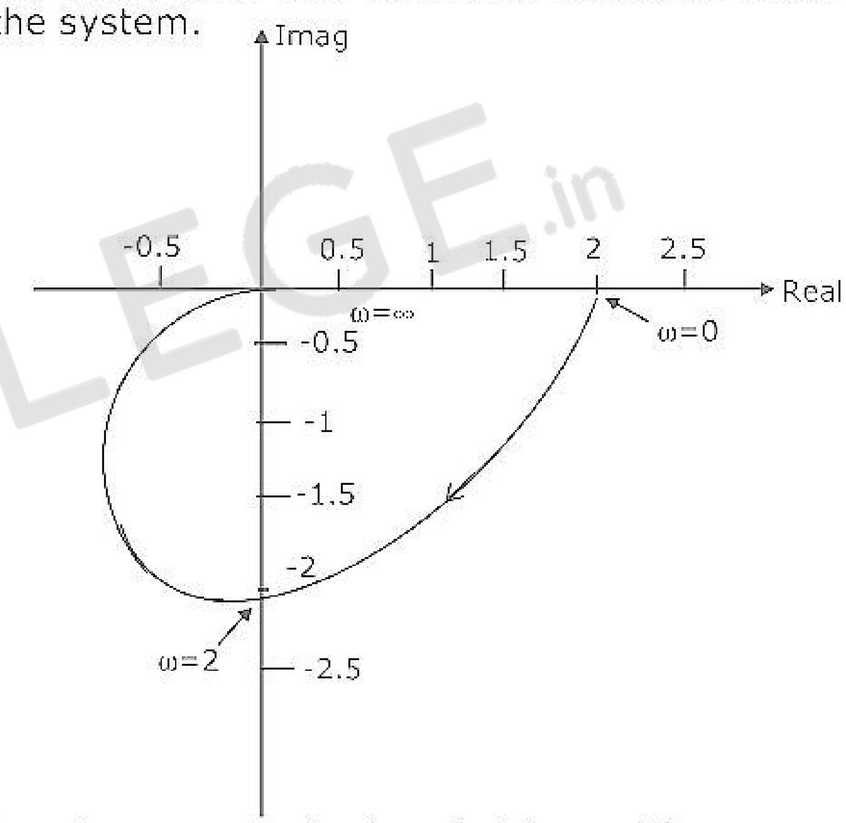

15. The block diagram of a linear time invariant system is given in Figure 15.

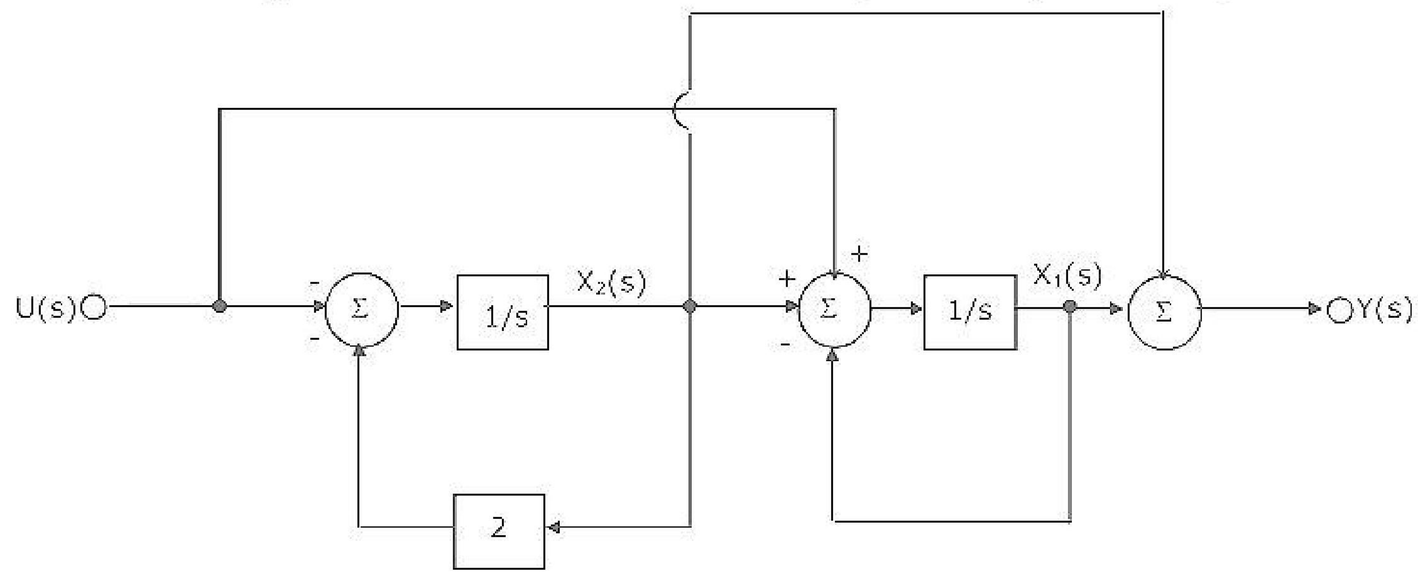

ZOLLEGE.in

(a) Write down the state variable equations for the system in matrix form assuming the state vector to be $\left[x_1(t)\, x_2(t)\right]^T$.

(b) Find out the state transition matrix.

(c) Determine y(t), $t \geq 0$, when the initial values of the state at time t = 0 are $x_1(0) = 1$, and $x_2(0) = 1$.

16. A deterministic signal $x(t) = \cos 2\pi t$ is passed through a differentiator as shown in Figure 16.

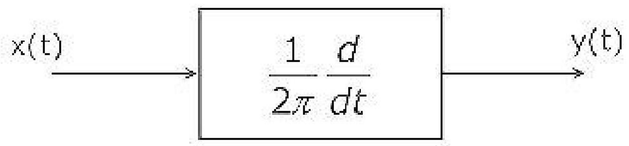

(a) Determine the autocorrelation $R_{xx}(T)$ and the power spectral density $S_{xx}(f)$.

(b) Find the output power spectral density $S_{yy}(f)$.

(c) Evaluate $R_{xy}(0)$ and $R_{xy}\left(\frac{1}{4}\right)$.

17. A DSBSC modulated signal $s(t) = 10 \cos(2\pi \times 10^6 t + \phi) m(t)$ is corrupted by an additive white Gaussian noise of power spectral density 10^{-4} W/Hz. The message power spectral density $S_{mm}(f)$ is as shown in Figure 17 and ϕ is uniformly distributed over the range 0 to 2π.

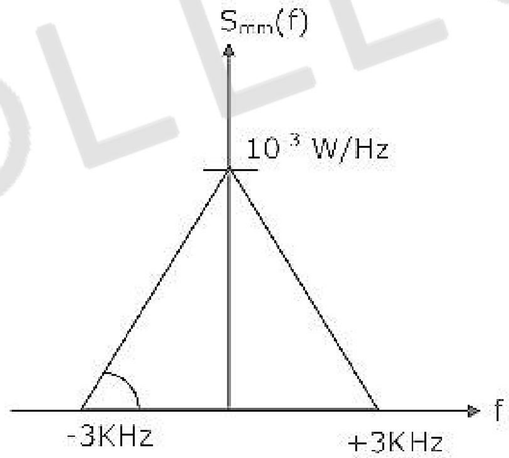

(a) Express the signal autocorrelation function $R_{SS}(T)$ in terms of the message autocorrelation function $R_{mm}(T)$. Clearly state the necessary assumptions.

(b) Determine the signal power spectral density $S_{SS}(f)$.

(c) Find the power of the modulated signal and the noise power in the transmissions bandwidth.

18. A continuous time signal with finite energy, band limited from 3 MHz to 5 MHz is ideally sampled, encoded by a fixed length PCM coder and then transmitted over a digital channel of capacity 7 Mbps. The probability density function (pdf) at the output of the sampler is uniform over the range −2V to +2V.

(a) Determine the minimum sampling rate necessary for perfect reconstruction.

(b) Determine the maximum SNR (in dB) that may be achieved.

ZOLLEGE.in

19. A discrete memory-less source generates either 0 or 1 at a rate of 160 Kbps; 0 is generated three times more frequently than 1. A coherent binary PSK modulator is employed to transmit these bits over a noisy channel. The received bits are detected in a correlator fed with the basis function of unit energy (for this binary PSK scheme) as the reference signal. The receiver makes a decision in favour of 1 if the correlator output is positive, else decides in favour of 0. If 0 and 1 are represented as $-\left(6\sqrt{2}\cos 640\pi \times 10^3 t\right)V$ and $\left(6\sqrt{2}\cos 640\pi \times 10^3 t\right)V$ respectively, then

(a) determine the transmitted signal energy per bit.

(b) determine the basis function of unit energy for this binary PSK scheme.

(c) determine the probability that the receiver makes a decision in favour of 1 when the channel noise is characterized as zero-mean AWGN with power spectral density $\frac{N_0}{2} = 3.125 \times 10^{-4} W/Hz$

20. Transmission line transformation of a load Z_L and Z is given by

$$Z = Z_0 \frac{Z_L + jZ_0 \tan(\beta l)}{Z_0 + jZ_L \tan(\beta l)}$$

(a) Show that the above transformation implies that the impedance Z gets transformed to Z_L^* for real Z.

(b) What is the importance of the result derived in (a)?

21. Consider a parallel plate wave-guide with plate separation d as shown in Figure 21 electric and magnetic fields for the TEM-mode are given by

$$E_x = E_0 e^{jkz + j\omega t}$$

$$H_y = \frac{E_0}{\eta} e^{-jkz - j\omega t}$$

where $k = \eta\omega\varepsilon$

(a) Determine the surface charge densities ρ_s on the plates at x = 0 and x = d.

(b) Determine the surface current densities $\vec{J}_s$ on the same plates.

(c) Prove that ρ_s and $\vec{J}_s$ satisfy the current continuity condition.

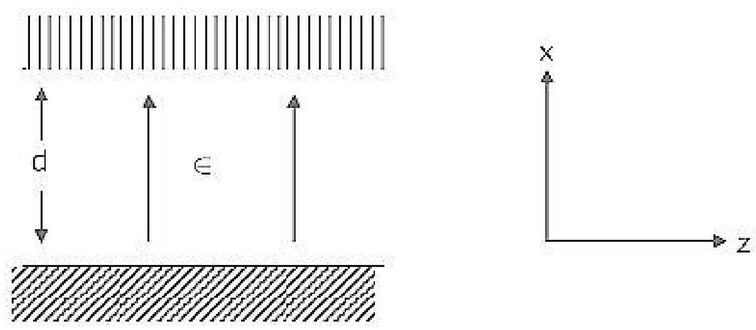

ZOLLEGE.in

22. Consider a linear array of two half-wave dipoles A and B as shown in Figure 22. The dipoles are $\frac{\lambda}{4}$ apart and are excited in such a way that the current on element B legs that on element A by 90° in phase.

(a) Obtain the expression for the radiation pattern for E_0 in the XY plane (i.e, $\theta=90°$)

(b) Sketch the radiation pattern obtained in (a).

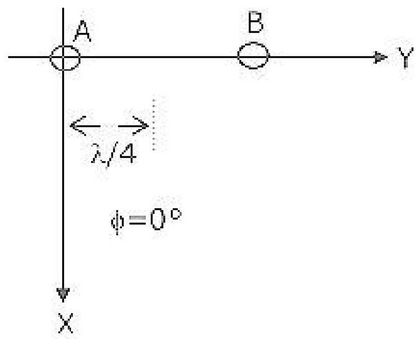

ZOLLEGE.in

ZOLLEGE.in