SECTION - A

1. This question consists of TWENTY-FIVE sub-questions (1.1 – 1.25) of ONE mark each. For each of these sub-questions, four possible alternatives (A, B, C and D) are given, out of which ONLY ONE is correct. Indicate the correct answer by darkening the appropriate bubble against the question number on the left hand side of the Objective Response Sheet (ORS). You may use the answer book provided for any rough work, if needed.

1.1 For $x = \frac{\pi}{6}$, the sum of the series $\sum_{1}^{\infty} (\cos x)^{2n} = \cos^2 x + \cos^4 x + \ldots$ is

(a) π (b) 3 (c) ∞ (d) 1

1.2 $(s+1)^{-2}$ is the Laplace transform of

(a) t^2 (b) t^3 (c) e^{-2t} (d) te^{-t} 0⇐0

1.3 If $\Phi(x) = \int_{0}^{x^2} \sqrt{t}\,dt$, then $\frac{d\Phi}{dx}$ is:

(a) $2x^2$ (b) $\sqrt{x}$ (c) 0 (d) 1

1.4 The magnitude of the gradient of the function $f = xyz^3$ at $(1, 0, 2)$ is:

(a) 0 (b) 3 (c) 8 (d) ∞

1.5 The probability that two friends share the same birth-month is:

(a) $\frac{1}{6}$ (b) $\frac{1}{12}$ (c) $\frac{1}{144}$ (d) $\frac{1}{24}$

1.6 A car moving with uniform acceleration covers 450 m in a 5 second interval, and covers 700 m in the next 5 second interval. The acceleration of the car is:

(a) 7 m/s^2 (b) 50 m/s^2 (c) 25 m/s^2 (d) 10 m/s^2

1.7 The buckling load for a column pinned at both ends is 10 kN. If the ends are fixed, the buckling load changes to

(a) 40 kN (b) 2.5 kN (c) 5 kN (d) 20 k N

1.8 The normal stresses at a point are $\sigma_x = 10$ MPa and, $\sigma_y = 2$ MPa; the shear stress at this point is 4 MPa. The maximum principal stress at this point is:

(a) 16 MPa (b) 14 MPa (c) 11 MPa (d) 10 MPa

ZOLLEGE.in

1.9 The ratio of average shear stress to the maximum shear stress in a beam with a square cross-section is:

(a) 1 (b) $\frac{2}{3}$ (c) $\frac{3}{2}$ (d) 2

1.10 Heat transfer coefficient for free convection in gases, forced convection in gases and vapours, and for boiling water lie, respectively in the ranges of

(a) 5 – 15, 20 – 200 and 3000 – 50,000 W/m^2K.

(b) 20 – 50, 200 – 500 and 50,000 – 10^5 W/m^2K.

(c) 50 – 100, 500 – 1000 and 10^5 – 10^6 W/m^2K.

(d) 20 – 100, 200 – 1000, and a constant 10^6 W/m^2K.

1.11 If V_N and α are the nozzle exit velocity and nozzle angle in an impulse turbine, the optimum blade velocity is given by

(a) $V_N \cos 2\alpha$ (b) $V_N \sin 2\alpha$ (c) $\frac{V_N \cos \alpha}{2}$ (d) $\frac{V_N^2}{2}$

1.12 A Curtis stage, Rateau stage and a 50% reaction stage in a steam turbine are examples of

(a) different types of impulse stages

(b) different types of reaction stages

(c) a simple impulse stage, a velocity compounded impulse stage and reaction stage

(d) a velocity compounded impulse stage, a simple impulse stage and a reaction stage

1.13 The basic load rating of a ball bearing is

(a) the maximum static radial load that can be applied without causing any plastic deformation of bearing component.

(b) the radial load at which 90% of the group of apparently identical bearings run for one million revolutions before the first evidence of failure.

(c) the maximum radial load that can be applied during operation without any plastic deformation of bearing components.

(d) a combination of radial and axial loads that can be applied without any plastic deformation.

1.14 Decreasing grain size in a polycrystalline material

(a) increases yield strength and corrosion resistance

(b) decreases yield strength and corrosion resistance

(c) decreases yield strength but increases corrosion resistance

(d) increases yield strength but decreases corrosion resistance.

ZOLLEGE.in

1.15 Auto collimator is used to check

(a) roughness
(b) flatness
(c) angle
(d) automobile balance

1.16 Failure of a bead weld between a heavy steel section and a thin section is mainly due to the formation of

(a) spheroidite
(b) bainite
(c) carbon free zone due to burning of carbon at high temperature
(d) martensite.

1.17 Ideal surface roughness, as measured by the maximum height of unevenness, is best achieved when the material is removed by

(a) an end mill
(b) a grinding wheel
(c) a tool with zero nose radius
(d) a ball mill

1.18 In the specification of dimensions and fits,

(a) allowance is equal to bilateral tolerance
(b) allowance is equal to unilateral tolerance
(c) allowance is independent of tolerance
(d) allowance is equal to the difference between maximum and minimum dimension specified by the tolerance.

1.19. In machining using abrasive material, increasing abrasive grain size

(a) increases the material removal rate
(b) decreases the material removal rate
(c) first decreases and then increases the material removal rate
(d) first increases and then decreases the material removal rate

1.20. With increasing temperature of intake air, IC engine efficiency

(a) decreases
(b) increases
(c) remains same
(d) depends on other factors

1.21. Chills are used in moulds to

(a) achieve directional solidification
(b) reduce the possibility of blowholes
(c) reduce freezing time
(d) smoothen metal flow for reducing splatter.

ZOLLEGE.in

1.22. One of the following statements about PRS (Periodic Reordering System) is not true. Identify,

(a) PRS requires continuous monitoring of inventory levels

(b) PRS is useful in control of perishable items

(c) PRS provides basis for adjustments to account for variations in demand

(d) In PRS, inventory holding costs are higher than in Fixed Recorder Quantity System

1.23. In inventory planning, extra inventory is unnecessarily carried to the end of the planning period when using one of the following lot size decision policies:

(a) Lot – for – lot production

(b) Economic Order Quantity (EOQ) lot size

(c) Period Order Quantity (POQ) lot size

(d) Part Period total cost balancing

1.24. In a weaving operation, the parameter to be controlled is the number of defects per 10 square yards of material. Control chart appropriate for this task is

(a) P - chart (b) C - chart (c) R - chart (d) $\bar{X}$ -Chart

1.25 Which one of the following forecasting techniques is not suited for making forecasts for planning production schedules in the short range?

(a) Moving average (b) Exponential moving average

(c) Regression analysis (d) Delphi

2. This question consists of TWENTY-FIVE sub-questions (2.1 – 2.25) of TWO marks each. For each of these sub-questions, four possible alternatives (A, B, C and D) are given, out of which ONLY ONE is correct.

2.1 The general solution of the differential equation $x^2 \frac{d^2y}{dx^2} - x\frac{dy}{dx} + y = 0$ is:

(a) $Ax + Bx^2$ (A,B are constants)

(b) $Ax + B\log x$ (A,B are constants)

(c) $Ax + Bx^2 \log x$ (A,B are constants)

(d) $Ax + Bx\log x$ (A,B are constants)

2.2. The best fit line using least squares for the data (0,0), (10, 24), (20, 36) and (30,60) is:

(a) 2x – y = 0 (b) 2x – y + 4 = 0

(c) 2x – y – 4 = 0 (d) None of these

ZOLLEGE.in

2.3. The maximum principal strain in a thin cylindrical tank, having a radius of 25 cm and wall thickness of 5 mm when subjected to an internal pressure of 1 MPa, is (taking Young's modulus as 200 GPa and Poisson's ratio as 0.2)

(a) 2.25×10^{4} (b) 2.25 (c) 2.25×10^{6} (d) 22.5

2.4. A square bar of side 4 cm and length 100 cm is subjected to an axial load P. the same bar is then used as a cantilever beam and subjected to an end load P. the ratio of the strain energies, stored in the bar is the second case to that stored in the first case, is:

(a) 16 (b) 400 (c) 1000 (d) 2500

2.5. An IC engine has a bore and stroke of 2 units each. The area to calculate heat loss can be taken as

(a) 4π (b) 5π (c) 6π (d) 8π

2.6. An air breathing aircraft is flying at an altitude where the air density is half the value at ground level. With reference to the ground level, the air-fuel ratio at this altitude will be

(a) $\sqrt[3]{2}$ (b) $\sqrt{2}$ (c) 2 (d) 4

2.7. For the data listed below for two journal bearings A and B, predict the flow conditions in the bearings

Bearing	Diameter (m)	Radial clearance (m)	Surface speed of shaft (m/s)	Viscosity of lubricant (Pa – s)	Density of lubricant (kg/m^3)
A	0.01	10^{-5}	210	0.001	1000
B	0.05	10^{-4}	10	0.01	850

(a) laminar in both A and B (b) turbulent in both A and B

(c) Laminar in A and turbulent in B (d) turbulent in A and laminar B

2.8. The isentropic heat drop in the nozzle of an impulse steam turbine with a nozzle efficiency 0.9, blade velocity ratio 0.5, and mean blade velocity 150 m/s in kJ/kg is

(a) 50 (b) 40 (c) 60 (d) 75

2.9. Air $(C_p = 1kJ/kg, \gamma = 1.4)$ enters a compressor at a temperature of 27°C. the compressor pressure ratio is 4. Assuming an efficiency of 80%, the compressor work required in kJ/kg is

(a) 160 (b) 172 (c) 182 (d) 225

ZOLLEGE.in

2.10. The dicharge velocity at the pipe exit in figure 2.10 is

(a) $\sqrt{2gH}$

(b) $\sqrt{2gh}$

(c) $\sqrt{g(H+h)}$

(d) 0

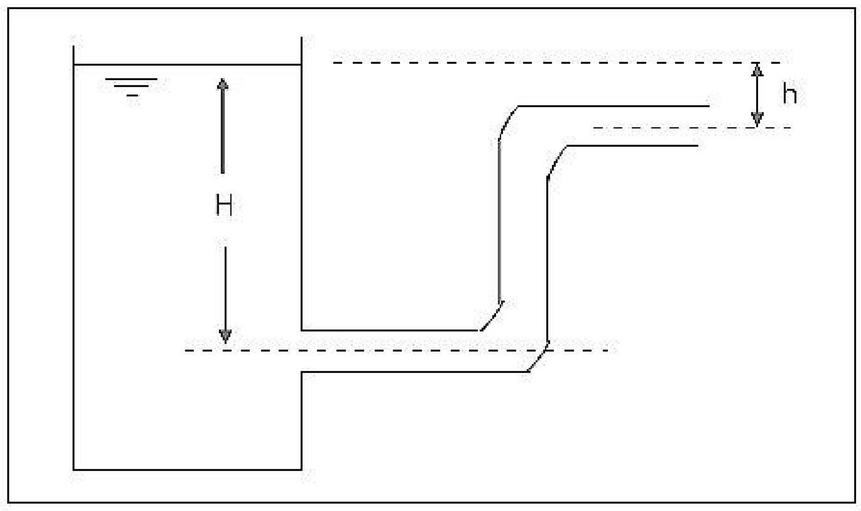

2.11. A steel ball of mass 1 kg and specific heat 0.4 kJ/kg is at a temperature of 60°C. It is dropped into 1 kg water at 20°C. The final steady state temperature of water is:

(a) 23.5°C (b) 30°C (c) 35°C (d) 40°C

2.12. The temperature variation under steady heat conduction across a composite slab of two materials with thermal conductivities K_1 and K_2 is shown in Figure 2.12. Then, which one of the following statements holds?

(a) $K_1 > K_2$ (b) $K_1 = K_2$

(c) $K_1 = 0$ (d) $K_1 < K_2$

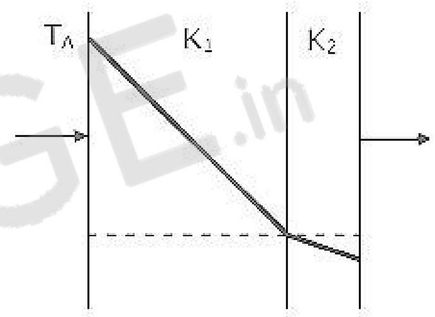

2.13. The earth can be assumed as a uniform sphere. Suppose the earth shrinks by 1% in diameter, the new day period

(a) will not change from 24 hours (b) will reduce by about 2%

(c) will reduce by about 1% (d) will increase by about 1%

2.14. Pertaining to a steam boiler, pick the correct statement among the following:

(a) Primary boiler heat surfaces include evaporator section, economizer and air preheater

(b) Primary boiler heat transfer surfaces include evaporator section, super heater section and economizer.

(c) Secondary boiler heat transfer surfaces include super heater, economizer and air preheater.

(d) Primary boiler heat transfer surfaces include evaporator section, super heater section and reheat section.

2.15. Consider the triangle formed by the connecting rod and the crank of an IC engine as the two sides of the triangle. If the maximum area of this triangle occurs when the crank angle is75°, the ratio of connecting rod length to crank radius is:

(a) 5 (b) 4 (c) 3.73 (d) 3

ZOLLEGE.in

2.16. The difference between tensions on the tight and slack sides of a belt drive is 3000 N. If the belt speed is 15 m/s, the transmitted power in kW is

(a) 45 (b) 22.5 (c) 90 (d) 100

2.17. The profile of a cam in a particular zone is given by $x = \sqrt{3}\cos\theta$ and $y = \sin\theta$. The normal to the cam profile at $\theta = \frac{\pi}{4}$ is at an angle (with respect to x axis):

(a) $\frac{\pi}{4}$ (b) $\frac{\pi}{2}$ (c) $\frac{\pi}{3}$ (d) 0

2.18. In an orthogonal machining operation, the chip thickness and the uncut thickness are equal to 0.45 mm. If the tool rake angle is 0°, the shear plane angle is

(a) 45° (b) 30° (c) 18° (d) 60°

2.19. A strip with a cross-section 150 mm × 4.5 mm is being rolled with 20% reduction of area using 450 mm diameter rolls. The angle subtended by the deformation zone at the roll centre is (in radius):

(a) 0.01 (b) 0.02 (c) 0.03 (d) 0.06

2.20. A flywheel of moment of inertia 9.8 kg m^2 fluctuates by 30 rpm for a fluctuation in energy of 1936 Joules. The mean speed of the flywheel is (rpm)

(a) 600 (b) 900 (c) 968 (d) 2940

3. Match 4 correct pairs between List I and List II for questions 3.1 to 3.5 below. No credit will be given for partial matching. Write your answers using only the letters A to D and numbers 1 to 6.

3.1

List I	List II
(A) Heat to work	(1) Nozzle
(B) Heat to lift weight	(2) Endothermic chemical reaction
(C) Heat to strain energy	(3) Heat engine
(D) Heat to electromagnetic energy	(4) Hot air balloon/evaporation
	(5) Thermal radiation
	(6) Bimetallic strips

ZØLLEGE.in

3.2

List I	List II
(A) Sand casting	(1) Symmetrical and circular shapes only
(B) Plaster mould casting	(2) Parts have hardened skins and soft interior
(C) Shell mould casting	(3) Minimum post-casting processing
(D) Investment casting	(4) Parts have a tendency to warp
	(5) Parts have soft skin and hard interior
	(6) Suitable only for non-ferrous metals

3.3.

List I	List II
(A) High head, low flow rate	(1) Streamlined body
(B) Low head, high flow rate	(2) Boundary layer
(C) Heat transfer	(3) Orifice meter
(D) Low drag	(4) Centrifugal pump
	(5) Axial flow pump
	(6) Nusselt number

3.4.

List I	List II
(A) Aluminium brake shoe	(1) Deep drawing
(B) Platstic water bottle	(2) Blow moulding
(C) Stainless steel cups	(3) Sand casting
(D) Soft drink can (aluminium)	(4) Centrifugal casting
	(5) Impact extrusion
	(6) Upset forging

3.5.

List I	List II
(A) ECM	(1) Plastic shear
(B) EDM	(2) Erosion/Brittle fracture
(C) USM	(3) Corrosive reaction
(D) LBM	(4) Melting and vapourization
	(5) Ion displacement
	(6) Platic shear and ion displacement

ZOLLEGE.in

4. The radial displacement in a rotating disc is governed by the differential equation

$$\frac{d^2u}{dx^2} + \frac{1}{x}\frac{du}{dx} - \frac{u}{x^2} = 8x$$

where u is the displacement and x is the radius.

If u = 0 at x = 0, and u = 2 at x = 1, calculate the displacement at $x = \frac{1}{2}$

5. A component used in the Mars pathfinder can be idealized as a circular bar clamped at its ends. The bar should withstand a torque of 1000 Nm. The components is assembled on earth when the temperature is 30°C. Temperature on Mars at the site of landing is −70°C. the material of the bar has an allowable shear stress of 200 MPa and its Young's modulus is 200 GPa. Design the diameter of the bar taking a factor of safety of 1.5 and assuming a coefficient of thermal expansion for the material of the bar as 12×10^{-4} /°C.

6. A gas filled tube has 2 mm inside diameter and 25 cm length. The gas is heated by an electrical wire of diameter 50 microns (0.05 mm) located along the axis of the tube. Current and voltage drop across the heating element are 0.5 amps and 4 volts, respectively. If the measured wire and inside tube wall temperatures are 175°C and 150°C respectively, find the thermal conductivity of the gas filling the tube.

7. Two castings of the same metal have the same surface area. One casting is in the form of a sphere and the other is a cube. What is the ratio of the solidification time for the sphere to that of the cube?

8. The chemical formula for alcohol is C_2H_6O. Calculate the stoichiometric air/fuel ratio by mass and the percentage composition of the products of combustion per kg of C_2H_6O.

SECTION – B

Answer any TEN questions. Each question carries 5 marks.

9. For the composite beam shown in Figure 9, flexural rigidities EI of AB and DC are equal to $10^5 N-cm^2$, and EI of BD is $2\times10^5 N-cm^2$. Using moment – area theorem, determine the location and magnitude of maximum deflection between B and C.

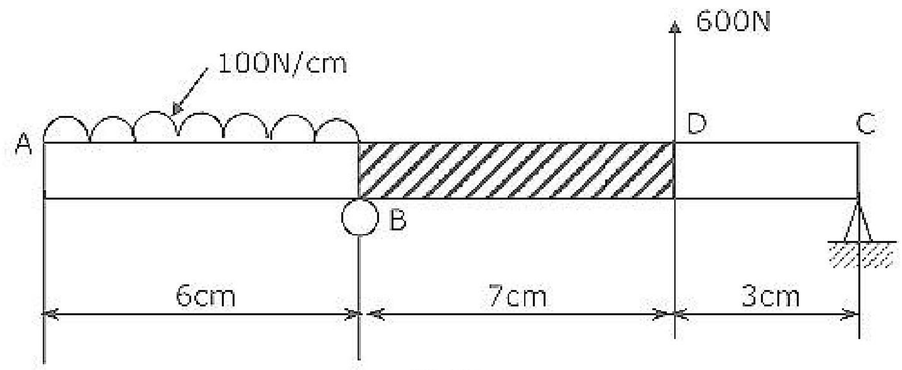

Fig.9

ZOLLEGE.in

10. For the piping system shown in Figure 10, $(EI)_{AB} = 10^{11} N - cm^2$ and $(EI)_{BC} = 8 \times 10^{11} N - cm^2$. The axial rigidity of DC, $(EA)_{DC} = 10^7 N$. Determine the load on DC.

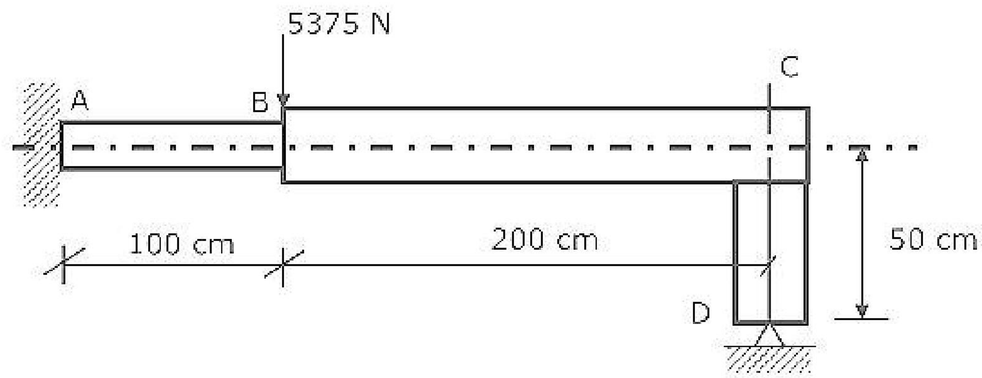

11. A cannon ball fired from the ground attained a maximum height of 1 km. At this maximum height, the radius of curvature of its path was also equal to 1 km. With this data, determine the initial velocity and angle of projection from the ground. Neglect air resistance.

12. A railway wagon (A) of mass 10,000 kg collides with another identical wagon (B) as shown in the figure 12. If A is moving at 5 m/s and B is at rest at the time of collision, calculate the maximum compression in the spring S with a spring constant of 2 MN/m.

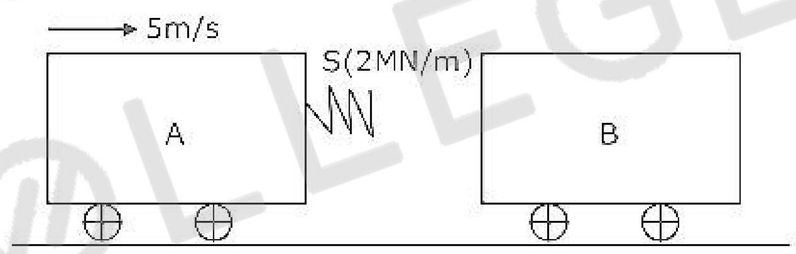

13. A planar cam drives a translating follower as shown in the figure 13. the cam profile is given by r = 5 + 2 sin ωx cm where ω is the angular velocity of the cam. The cam is initially pressed by the follower by a compression spring of stiffness 2 kN/cm when r = 5 cm. Calculate the maximum operating speed of this system for the follower to maintain contact with the camp profile. The mass of the follower can be taken as 1 kg. The initial spring compression 1 5 mm.

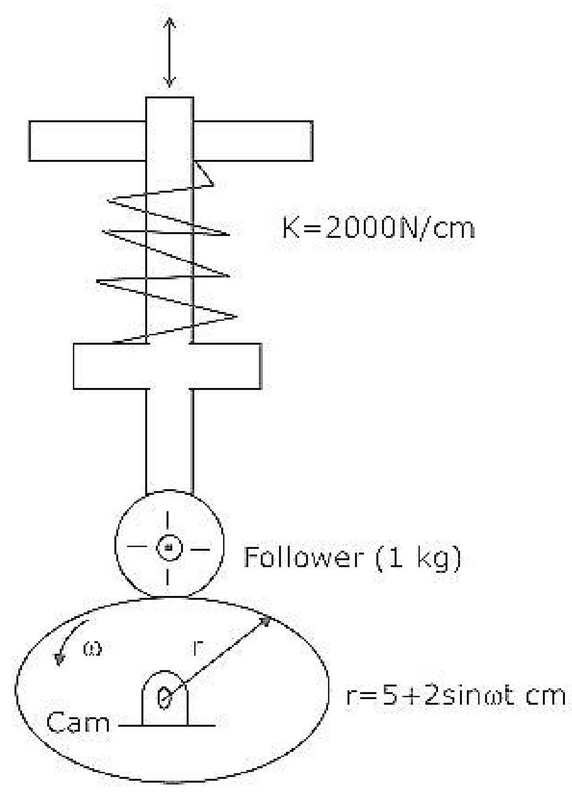

ZOLLEGE.in

14. A Rankine cycle operates between pressures of 80 bar and 0.1 bar. The maximum cycle temperature is 600°C. If the steam turbine and condensate pump efficiencies are 0.9 and 0.8, respectively, calculate the specific work and thermal efficiency. Relevant steam table extract is given below:

P bar	T°C	Specific volume m^3/kg		Specific enthalpy kJ/kg			Specific entropy kJ/kg K		
		V_f	V_g	h_f	h_{fg}	h_g	S_f	S_{fg}	S_g
0.1	45.84	0.0010103	14.68	191.9	2392.3	2584.2	0.6488	7.5006	8.1494
80	295.1	0.001385	0.0235	1317	1440.5	2757.5	3.2073	2.5351	5.7424

80 bar – 600°C	v	0.486
Superheat table	h	3642
	s	7.0206

15. A hot fluid at 200°C enters a heat exchanger at a mass flow rate of 10^4 kg/hr. Its specific heat is 2000J/kg K. It is to be cooled by another fluid entering at 25°C with a mass flow rate 2500 kg/hr and specific heat 400 J/kg K. the overall heat transfer coefficient based on outside area of $20m^2$ is 250 W/m^2K. Find the exit temperature of the hot fluid when the fluids are in parallel flow.

16. The minimum pressure and temperature in an Otto cycle are 100 kPa and 27°C. the amount of heat added to the air per cycle is 1500 kJ/kg. Determine the pressure and temperature at all points of the air standard Otto cycle. Also calculate the specific work and the thermal efficiency of the cycle for a compression ratio of 8:1. (Take C_v (air) as 0.72 kJ/kg K and $\left(\frac{C_p}{C_v}\right) = 1.4$)

17. Find the required air-fuel ratio in a gas turbine whose turbine and compressor efficiencies are 85% and 80% respectively. Maximum cycle temperature is 875°C. the working fluid can be taken as air $(C_p = 1.00 kJ/kg\ K, \gamma = 1.4)$, which enters the compressor at 1 atm and 27°C. The pressure ratio is 4. The fuel used has calorific value of 42000 kJ/kg. There is a loss of 10% of calorific value in the combustion chamber.

18. A turbocharged six-cylinder diesel engine has the following performance details:
    (i) Work done during compression and expansion = 820 kW.
    (ii) Work done during intake and exhaust = 50 kW.
    (iii) Rubbing friction in the engine = 150 kW.
    (iv) Net work done by turbine = 40 kW.

    If the brake means effective pressure is 0.6 MPa, determine the bore and the stroke of the engine taking the ratio of bore to stroke as 1 and engine speed as 100 rpm.

ZOLLEGE.in

19. Select one of the following two bearings and justify why did you reject the other:

(a) Deep groove ball bearing

dynamic load rating = 47,000 N
radial factor (x) = 0.56
axial load factor (y) = 1.83

(b) Cylindrical roller bearing

dynamic load rating = 28,000 N
radial factor (x) = 1.0
axial load factor (y) = 0.0
Life expectancy = 10,000 bar
Rotation factor = 1
Reliability factor = 0.62

Local condition

Radial load = 3,000 N
Axial load = 1,600 N
RPM = 1,000

20. A flat road has a curve segment with a radius of 100 m. while negotiating this curve, a vehicle slipped on its tyres as well as tried to rollover at a particular speed. Calculate this speed assuming a friction coefficient of 0.5. Also calculate the height of CG of the vehicle above ground if the tread (distance between the tyres at the front or rear) is 1.2 m.

21. A cylinder of mass 10 kg and area of cross-section $0.1m^2$ is tied down with string in a vessel containing two liquids as shown in Figure 21. Calculate gauge pressure on the cylinder bottom and the tension in the string. Density of water = 1000 kg/m^3. Specific gravity of A = 0.8. Specific gravity of B(water) = 1.0

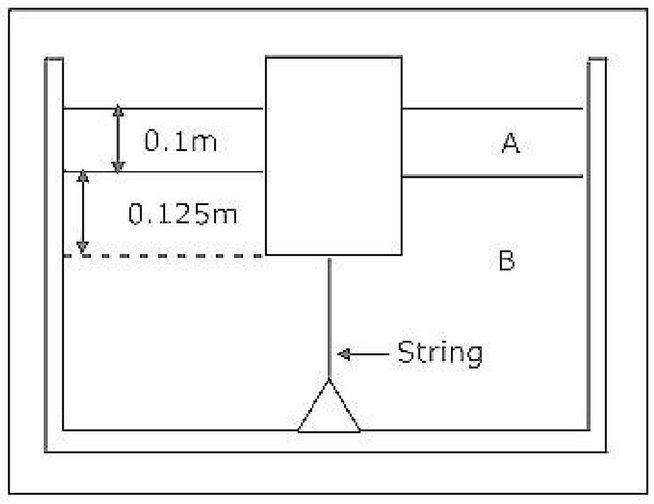

ZOLLEGE.in

22. Hot water flows with a velocity of 0.1 m/s in a 100 m long, 0.1 m diameter pipe. Heat loss from the pipe outer wall is uniform and equal to 420 W/m^2. If the inlet water temperature is 80°C, calculate the water temperature at the exit. Neglect effect of pipe wall thickness, C_p (water) =4.2 kJ/kg °C and density of water = 1000 kg/m^3.

23. A farmer wishes to connect two pipes of different lengths and diameters to a common header supplied with 8×10^3 m^3/s of water from a pump. One pipe is 100 m long and 5 cm in diameter. The other pipe is 800 m long. Determine the diameter of the second pipe such that both pipes have the same flow rate. Assume the pipes to be laid on level ground and friction factor for both pipes as 0.02. Also determine the head loss in metres of water in the pipes.

Note: Pressure drop = $f\frac{1}{2}\rho v^2\frac{L}{D}$, where f is friction factor.

24. A vertical jet of water is able to keep hemispherical shell as shown in Figure 24. The water jet is issuing from a nozzle of area A_N with a velocity V_N at the nozzle exit. Using Bernoulli's equation and momentum theorem develop expression for jet velocity at the shell and the height H at which the shell is balanced. Shell mass = m. water density is ρ, and assume ideal flow.

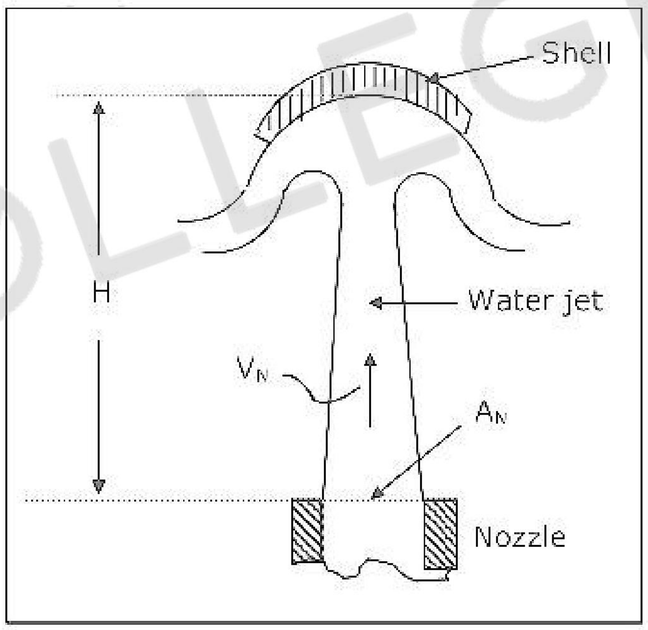

25. The voltage (V) – length (l) characteristic of a d.c. arc is given by V = 20 + 4l Volt (l in mm). During a welding operation the arc length is expected to vary between 4 and 6 mm with the welding current limited between 450 and 550 amps. If the power source has a linear characteristic, calculate the arc power at an a.c. length of 5-mm. What is the open circuit voltage?

26. In a plain slab up-milling operation with a straight cutter, the diameter is 50 mm and the depth of cut is 7.32 mm. Number of teeth on the cutter is 8. Plot the variation of torque with the arbor rotation.

ZOLLEGE.in

27. A cylinder of 155 mm is to be reduced 150 mm diameter in one turning cut with a feed of 0.15 mm/ revolution and a cutting speed of 150 m/min on a NC lathe. What are the programmed spindle speeds programmed feed rate, and the material removal rate?

28. A job shop has 6 orders to be completed by a single turning centre. The processing times and due dates are as follows:

Order	1	2	3	4	5	6
Processing time	3	2	9	4	2	4
Due date	17	21	5	12	15	24

Assume that all orders are ready for processing.

Give a production schedule that minimizes the average flow time. Compare this schedule with one that minimizes tardiness (lateness).

ZOLLEGE.in

ZOLLEGE.in