SECTION - A

1. This question consists of TWENTY-FIVE sub-questions (1.1 – 1.25) of ONE mark each. For each of these sub-questions, four possible alternatives (A, B, C and D) are given, out of which ONLY ONE is correct. Indicate the correct answer by darkening the appropriate bubble against the question number on the left hand side of the Objective Response Sheet (ORS). You may use the answer book provided for any rough work, if needed.

1.1 If Z = f(x,y), dz is equal to

(a) $\left(\frac{\partial f}{\partial x}\right)dx + \left(\frac{\partial f}{\partial y}\right)dy$

(b) $\left(\frac{\partial f}{\partial y}\right)dx + \left(\frac{\partial f}{\partial x}\right)dy$

(c) $\left(\frac{\partial f}{\partial x}\right)dx - \left(\frac{\partial f}{\partial y}\right)dy$

(d) $\left(\frac{\partial f}{\partial y}\right)dx - \left(\frac{\partial f}{\partial x}\right)dy$

1.2 $\underset{x \to 1}{Lt} \frac{\left(x^2 - 1\right)}{\left(x - 1\right)}$ is:

(a) ∞ (b) 0 (c) 2 (d) 1

1.3 The solution of the differential equation $\frac{d^2y}{dx^2} + \frac{dy}{dx} + y = 0$ is

(a) $Ae^x + Be^{-x}$

(b) $e^x(Ax + B)$

(c) $e^{-x}\left\{A\cos\left(\frac{\sqrt{3}}{2}\right)x + B\cos\left(\frac{\sqrt{3}}{2}\right)x\right\}$

(d) $e^{-\frac{x}{2}}\left\{A\cos\left(\frac{\sqrt{3}}{2}\right)x + B\cos\left(\frac{\sqrt{3}}{2}\right)x\right\}$

1.4 The three characteristic roots of the following matrix A

$$A = \begin{bmatrix} 1 & 2 & 3 \\ 0 & 2 & 3 \\ 0 & 0 & 2 \end{bmatrix} \text{ are}$$

(a) 1, 2, 3 (b) 1, 2, 2 (c) 1, 0, 0 (d) 0, 2, 3

1.5 Availability of a system at any given state is

(a) a property of the system

(b) the maximum work obtainable as the system goes to dead state

(c) the total energy of the system

(d) the maximum useful work obtainable as the system goes to dead state

ZOLLEGE.in

1.6 A steam turbine receives steam steadily at 10 bars with an enthalpy of 3000 kJ/kg and discharges at 1 bar with an enthalpy of 2700 kJ/kg. The work output is 250 kJ/kg. The changes in kinetic and potential energies are negligible. The heat transfer from the turbine casing to the surroundings is equal to

(a) 0 kJ (b) 50 kJ (c) 150 kJ (d) 250 kJ

1.7 In a vapour compression refrigeration system, liquid to suction heat exchanger is used to

(a) keep the COP constant

(b) prevent the liquid refrigerant from entering the compressor

(c) subcool the liquid refrigerant leaving the condensor

(d) subcool the vapour refrigerant from the evaporator

1.8 A steel steam pipe 10 cm inner diameter and 11 cm outer diameter is covered with an insulation having a thermal conductivity of 1 W/mK. If the convective heat transfer coefficient between the surface of insulation and the surrounding air is 8 W/m^2K, the critical radius of insulation is

(a) 10 cm (b) 11 cm (c) 12.5 cm (d) 15 cm

1.9 Which of the following is a pressure compounded turbine?

(a) Parsons (b) Curtis (c) Rateau (d) all the three

1.10 When the speed of a centrifugal pump is doubled, the power required to drive the pump will

(a) increase 8 times (b) increase 4 times

(c) double (d) remain the same

1.11 Global warming is caused by

(a) ozone (b) carbon dioxide

(c) nitrogen (d) carbon monoxide

1.12 Navier Strokes equation represents the conservation of

(a) energy (b) mass

(c) pressure (d) momentum

1.13 In a bi-axial stress problem, the stresses in x and y directions are $\sigma_x = 200\ MPa$ and $\sigma_y = 100\ MPa$. the maximum principal stress in MPa, is

(a) 50 (b) 100 (c) 150 (d) 200

ZOLLEGE.in

1.14 The ratio of tension on the tight side to that on the slack side in a flat belt drive is:

(a) proportional to the product of coefficient of friction and lap angle

(b) an exponential function of the product of coefficient of friction and lap angle

(c) proportional to the lap angle

(d) proportional to the coefficient of friction

1.15 The natural frequency of an undamped vibrating system is 100 rad/s. A damper with a damping factor of 0.8 is introduced into the system. The frequency of vibration of the damped system, in rad/s, is

(a) 60 (b) 75 (c) 80 (d) 100

1.16 A steel shaft 'A' of diameter 'd' and length 'l' is subjected to a torque 'T'. Anohter shaft 'B' made of aluminium of the same diameter 'd' and length 0.5 l is alsos subjected to the same torque 'T'. The shear modulus of steel is 2.5 times the shear modulus of aluminium. The shear stress in the steel shaft is 100 MPa. The shear stress in the aluminium shaft, in MPa, is

(a) 40 (b) 50 (c) 100 (d) 250

1.17 A 1.5 kW motor is running at 1440 rev/min. It is to be connected to a stirrer running at 36 rev/min. The gearing arrangement suitable for this application is

(a) differential gear (b) helical gear

(c) spur gear (d) worm gear

1.18 A steel wheel of 600 mm diameter rolls on a horizontal steel rail. It carries a load of 500 N. The coefficient of rolling resistance is 0.3 mm. The force in N, necessary to roll the wheel along the rail is

(a) 0.5 (b) 5 (c) 15 (d) 150

1.19. Abrasive material used in grinding wheel selected for grinding ferrous alloys is:

(a) silicon carbide (b) diamond

(c) aluminium oxide (d) boron carbide

1.20. Cast steel crankshaft surface is hardened by

(a) nitriding (b) normalizing

(c) carburising (d) induction heating

1.21. Disposable patterns are made of

(a) wood (b) rubber (c) metal (d) polystyrene

ZOLLEGE.in

1.22. Deep hole drilling of small diameter, say 0.2 mm is done with EDM by selecting the tool material as

(a) copper wire (b) tungsten wire

(c) brass wire (d) tungsten carbide

1.23. In computer aided drafting practice, an arc is defined by

(a) two end points only (b) center and radius

(c) radius and one end point (d) two end points and centre

1.24. In a time study exercise, the time observed for an activity was 54 seconds. The operator had a performance rating of 120. A personal time allowance of 10% is given. The standard time for the activity, in seconds, is

(a) 54 (b) 60.8 (c) 72 (d) 58.32

1.25 Cellular manufacturing is suitable for

(a) a single product in large volumes

(b) one-off production of several varieties

(c) products with similar features made in batches

(d) large variety of products in large volumes.

2. This question consists of TWENTY-FIVE sub-questions (2.1 – 2.25) of TWO marks each. For each of these sub-questions, four possible alternatives (A, B, C and D) are given, out of which ONLY ONE is correct. Indicate the correct answer by darkening the appropriate bubble against the question number on the left hand side of the Objective Response Sheet (ORS). You may use the answer book provided for any rough work, if needed.

2.1 The Laplace transform of the function $\sin^2 2t$ is:

(a) $\dfrac{\left(\frac{1}{2s}\right)-s}{\left[2\left(s^2+16\right)\right]}$ (b) $\dfrac{s}{\left(s^2+16\right)}$

(c) $\dfrac{\left(\frac{1}{s}\right)-s}{\left(s^2+4\right)}$ (d) $\dfrac{s}{\left(s^2+4\right)}$

2.2. The maximum value of the directional derivative of the function

$\phi = 2x^2 + 3y^2 + 5z^2$ at a point (1,1,-1) is

(a) 10 (b) -4 (c) $\sqrt{152}$ (d) 152

ZOLLEGE.in

2.3. $\int_0^{\frac{\pi}{2}}\int_0^{\frac{\pi}{2}} \sin(x+y)\,dxdy$ is:

(a) 0 (b) π (c) $\frac{\pi}{2}$ (d) 2

2.4. In a manufacturing plant, the probability of making a defective bolt is 0.1. The mean and standard deviation of defective bolts in a total of 900 bolts are respectively

(a) 90 and 9 (b) 9 and 90 (c) 81 and 9 (d) 9 and 81

2.5. In Fig.2.5 if the pressure of gas in bulb A is 50 cm Hg vacuum and p_{atm} = 76 cm Hg, the height of column H is equal to

(a) 26 cm
(b) 50 cm
(c) 76 cm
(d) 126 cm

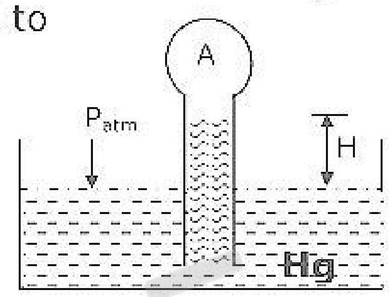

2.6. For a compressible fluid, sonic velocity is

(a) a property of the fluid

(b) always given by $(\gamma RT)^{\frac{1}{2}}$, where γ, R and T are respectively the ratio of specific heats, gas constant and temperature in K

(c) always given by $\left(\frac{\partial p}{\partial \rho}\right)_s^{\frac{1}{2}}$ where p, ρ and s are respectively pressure, density and entropy.

(d) always greater than the velocity of fluid at any location.

2.7. When an ideal gas with constant specific heats is throttled adiabatically, with negligible changes in kinetic and potential energies

(a) $\Delta h = 0, \Delta T = 0$ (b) $\Delta h > 0, \Delta T = 0$

(c) $\Delta h > 0, \Delta s > 0$ (d) $\Delta h = 0, \Delta s > 0$

where h, T and s represent respectively, enthalpy, temperature and entropy.

2.8. When atmospheric air is heated at constant pressure, its

(a) humidity ratio does not change
(b) relative humidity increases
(c) dew point temperature does not change
(d) wet bulb temperature increases

ZOLLEGE.in

2.9. Consider air standard Otto and Diesel cycles, both having the same state of air at the start of compression. If the maximum pressure in both the cycles is the same, the compression ratio 'r' and the efficiency 'η' are related by

(a) $r_{Diesel} > r_{Otto}$ (b) $r_{Diesel} < r_{Otto}$ (c) $\eta_{Otto} > \eta_{Diesel}$ (d) $\eta_{Otto} < \eta_{Diesel}$

2.10. Air enters a counter-flow heat exchanger at 70°C and leaves at 40°C. Water enters at 30°C and leaves at 50°C. The LMTD in deg. C is

(a) 5.65 (b) 4.43 (c) 19.52 (d) 20.17

2.11. A fuel represented by the formula C_8H_{16} is used in an I.C. Engine. Given that the molecular weight of air is 29 and that 4.76 kmols of air contain 1 kmol of oxygen and 3.76 kmols of nitrogen, the Air/Fuel ratio by mass is

(a) 11.47 (b) 12.78 (c) 14.79 (d) 19.52

2.12. For the following "Matching" exercise, choose the correct one from among the alternatives A, B, C, and D.

Group 1	Group 2
1. Marine Diesel Engine	(a) Two stroke engine
2. Air conditioning	(b) Four stroke engine
3. Steam Power Plant	(c) Rotary engine
4. Gas Turbine Power Plant	(d) Cooling and dehumidification
	(e) Cooling tower
	(f) Brayton cycle
	(g) Rankine cycle
	(h) D-slide valve

(a) 1 – b 2 – e 3 – f 4 - h (b) 1 – c 2 – f 3 – e 4 - g

(c) 1 – c 2 – f 3 – g 4 - e (d) 1 – a 2 – d 3 – g 4 - f

2.13. An automobile of weight W is shown in Fig.2.13. A pull 'P' is applied as shown. The reaction at the front wheels (location A) is

(a) $\frac{W}{2} - \frac{Pb}{2a}$

(b) $\frac{W}{2} + \frac{Pb}{2a}$

(c) $\frac{W}{2} - \frac{Pa}{2b}$

(d) $\frac{W}{2}$

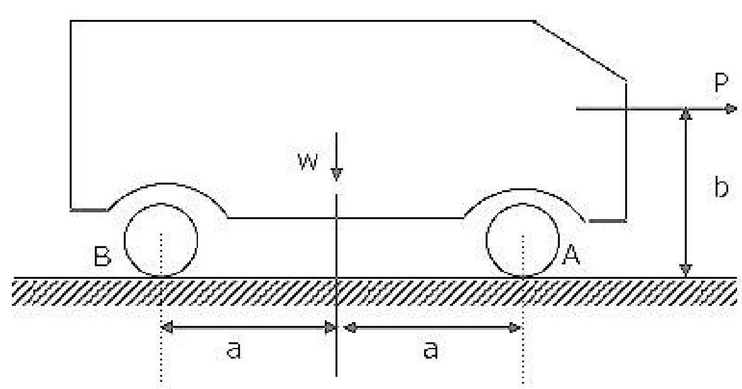

ZOLLEGE.in

2.14. A simply supported beam carries a load 'P' through a bracket, as shown in Fig.2.14. The maximum bending moment in the beam is

(a) $\frac{Pl}{2}$

(b) $\frac{Pl}{2} + \frac{aP}{2}$

(c) $\frac{Pl}{2} + aP$

(d) $\frac{Pl}{2} - aP$

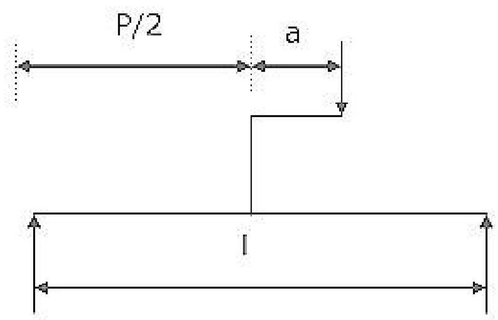

2.15. In an experiment to find the velocity and acceleration of a particular cam rotating at 10 rad/s, the values of displacements and velocities are recorded. The slope of displacement curve at an angle of 'θ' is 1.5 m/s and the slope of velocity curve at the same angle is −0.5 m/s^2. The velocity and acceleration of the cam at the instant are respectively.

(a) 15 m/s and −5 m/s^2
(b) 15 m/s and 5 m/s^2
(c) 1.2 m/s and −0.5 m/s^2
(d) 1.2 m/s and 0.5 m/s^2

2.16. As shown in Fig.2.16, a mass of 100 kg is held between two springs. The natural frequency of vibration of the system, in cycles/s, is

(a) $\frac{1}{2\pi}$
(b) $\frac{5}{\pi}$
(c) $\frac{10}{\pi}$
(d) $\frac{20}{\pi}$

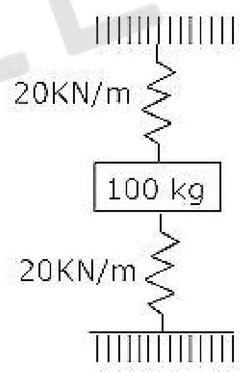

2.17. The life of a ball bearing at a load of 10 kN is 8000 hours. Its life in hours, if the load is increased to 20 kN, keeping all other conditions the same, is

(a) 4000
(b) 2000
(c) 1000
(d) 500

2.18. A fit is specified as 25 H8/e8. The tolerance value for a nominal diameter of 25 mm in IT8 is 33 microns and fundamental deviation for the shaft is −40 microns. The maximum clearance of the fit in microns is

(a) -7
(b) 7
(c) 73
(d) 106

2.19. A 1.5 mm thick sheet is subject to unequal biaxial stretching and the true strains in the directions of stretching are 0.05 and 0.09. The final thickness of the sheet in mm is

(a) 1.414
(b) 1.304
(c) 1.362
(d) 289

ZOLLEGE.in

2.20. From an equilateral triangular plate of side 'a', a square plate of maximum size has to be cut. The side of such a square plate is:

(a) $\frac{\sqrt{3}a}{2}$ (b) $\frac{(2+\sqrt{3})a}{4}$ (c) $\frac{(1+\sqrt{3})a}{8}$ (d) $\frac{\sqrt{3}a}{(2+\sqrt{3})}$

2.21. The stress-strain behaviour of a material is shown in Fig.2.21. Its resilience and toughness, in Nm/m^3, are respectively

(a) $28\times10^4, 76\times10^4$

(b) $28\times10^4, 48\times10^4$

(c) $14\times10^4, 90\times10^4$

(d) $76\times10^4, 104\times10^4$

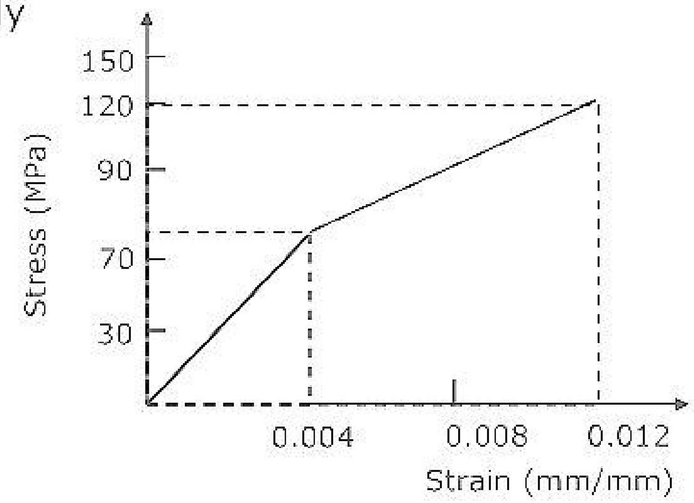

2.22. A slot is to be milled centrally on a block with a dimension of 40 ± 0.05 mm. A milling cutter of 20 mm width is located with reference to the side of the block within ± 0.02 mm. The maximum offset in mm between the centerlines of the slot and the block is

(a) ± 0.070 (b) 0.070 (c) ± 0.020 (d) 0.045

2.23. In finish machining of an island on a casting with CNC milling machine, an end mill with 10 mm diameter is employed. The corner points of the island are represented by (0,0), (0,30), (50,30) and (50,0). By applying cutter radius right compensation, the trajectory of the cutter will be

(a) (-5,0), (-5,35), (55,35), (55,-5), (-5,-5)

(b) (0,-5), (55,-5), (55,35), (-5,35), (-5,-5)

(c) (5,5), (5,25), (45,25), (45,5), (5,5)

(d) (5,5), (45,5), (45,25), (5,25), (5,5)

2.24. In a single server infinite population queuing model, arrivals follow a Poisson distribution with mean λ = 4 per hour. The service times are exponential with mean service time equal to 12 minutes. The expected length of the queue will be

(a) 4 (b) 3.2 (c) 1.25 (d) 5

2.25. In a time series forecasting model, the demand for five time periods was 10, 13, 15, 18 and 22. A linear regression fit resulted in an equation F = 6.9 + 2.9 t where F is the forecast for period t. The sum of absolute deviations for the five data is:

(a) 2.2 (b) 0.2 (c) -1.2 (d) 24.3

ZOLLEGE.in

SECTION – B

This section consists of TWENTY questions of FIVE marks each. Attempt ANY FIFTEEN questions. Answers must be given in the answer book provided. Answer for each question must start on a fresh page and must appear at one place only. (Answers to all parts of a question must appear together).

3. Estimate the root of the equation $\left(e^{x} - x\right) = 0$ to four decimal accuracy by employing the Newton-Raphson method starting with an initial guess of $x_o = 0$.

4. A certain mass of a pure substance undergoes an irreversible process from state 1 to state 2, the path of the process being a straight line on the T-s diagram. Calculate the work interaction. Some of the properties at the initial and final states are:
T_1=330 K, T_2=440 K, U_1 = 170 kJ, U_2 = 190 kJ, H_1 = 220 kJ, H_2 = 247 kJ and S_1 = 0.23 kJ/K and S_2 = 0.3 kJ/K, where T, U, H and S represent temperature, internal energy, enthalpy and entropy respectively.

5. A thin metal plate is exposed to solar radiation. The air and the surroundings are at 30°C. The heat transfer coefficient by free convection from the upper surface of the plate is 17.4 W/m^2K. The plate has an absorptivity of 0.9 at solar wavelength and an emissivity of 0.1 at the long wavelength. Neglecting any heat loss from the lower surface, determine the incident solar radiation intensity in kW/m^2, if the measured equilibrium temperature of the plate is 50°C. Stefan Boltzmann constant is 5.67×10^{-8} W/m^2K^4.

6. In an ideal air-standard Gas turbine cycle, the minimum and maximum temperatures are respectively 310 K and 1100 K. Draw the cycle on a T-s diagram and calculate the optimal pressure ratio of the cycle for maximum work output. Assume for air $\frac{(\gamma - 1)}{\gamma}$ is 0.29 where γ is the ratio of specific heats.

7. A Diesel engine develops a Brake power of 4.5 kW. Its indicated thermal efficiency is 30% and the mechanical efficiency is 85%. Take the calorific value of the fuel as 40000 kJ/kg and calculate (a) the fuel consumption in kg/h and (b) the indicated specific fuel consumption.

8. A simple impulse turbine expands steam frictionlessly from 12 bar, 250°C with an enthalpy of 2935 kJ/kg to an enthalpy of 2584 kJ/kg at 0.1 bar. Assuming that the nozzle makes an angle of 20° with the blade motion, and that the blades are symmetrical, find the blade velocity that produces maximum efficiency for a turbine speed of 3600 rev/min. assume that the steam enters the nozzle with negligible velocity.

ZOLLEGE.in

9. In a 5 kW cooling capacity refrigeration system operating on a simple vapour compression cycle, the refrigerant enters the evaporator with an enthalpy of 75 kJ/kg and leaves with an enthalpy of 183 kJ/kg. The enthalpy of the refrigerant after compression is 210 kJ/kg. Show the cycle on T-s or p-h diagram. Calculate the following:

(a) COP

(b) power input to compressor and

(c) rate of heat transfer at the condenser.

10. A single acting single cylinder reciprocating air compressor running at 7.5 rev/s, takes in air at 100 k Pa, 27°C. The compressor delivers air at 600 k Pa at a flow rate of 0.12 m^3/s measured at suction conditions. Given that the percentage clearance is 4 and that the index of compression and expansion is 1.2. Calculate

(a) the ideal volumetric efficiency and

(b) the cylinder bore and stroke, assuming the bore/stroke ratio is 0.8.

11. For the toggle device shown in Fig.11, derive the relationship between forces P and F in terms of the angle θ.

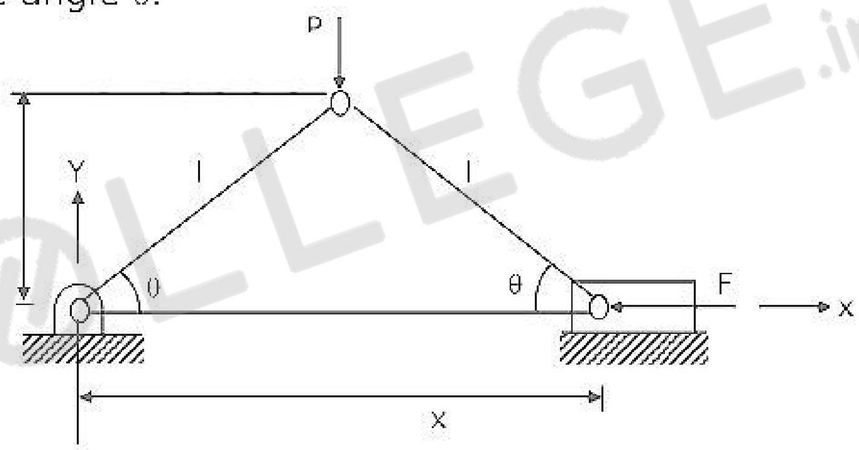

12. A steel bolt having a nominal diameter of 20 mm and a pitch of 2.4 mm is used to connect two plates of 10 mm thickness each. An aluminium tube of inner diameter 22 mm and outer diameter of 40 mm is separating the plates as shown in Fig.12. the nut is pulled snug (just tight) and then given a one-third additional turn. Find the resulting stresses in the bolt and the tube neglecting the deformation of the plates. Young's modulus of steel and aluminium are 207×10^3 MPa and 67.5×10^3 MPa respectively.

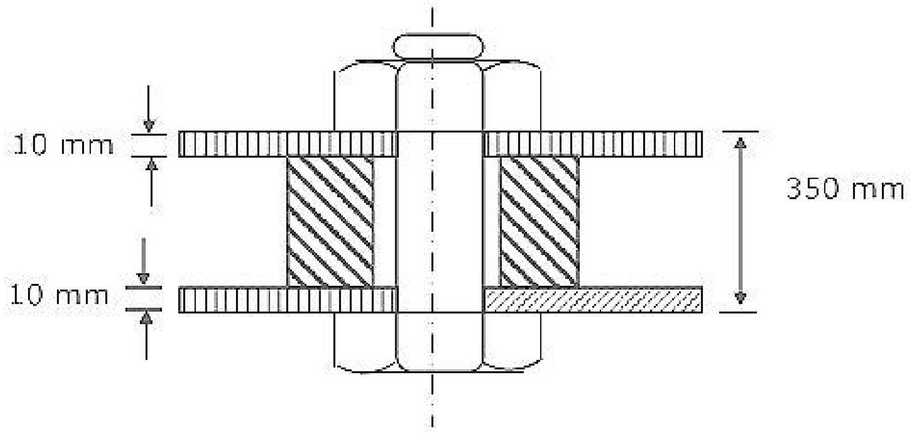

ZOLLEGE.in

13. A single block brake with a 300 mm diameter brake down in Fig.13 is used to absorb a torque of 75 Nm. The coefficient of friction between the drum and the lining is 0.35. The pressure on the blocks is uniform. Calculate the force P.

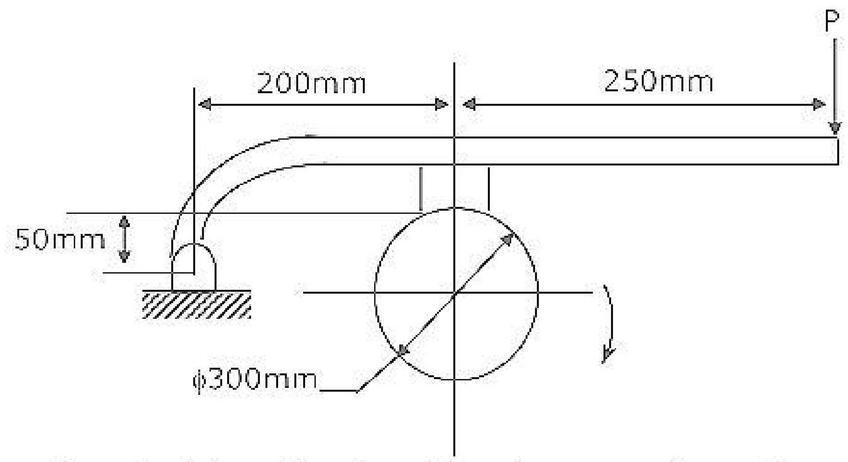

14. A punch press, fitted with a flywheel having a radius of gyration of 0.5m, runs at 260 rev/min. the press is capable of punching 600 holes per hour. Each punching operation takes 1.5 seconds and requires a work of 10,000 Nm. The rating of the electric motor used is 2 kW. Determine the mass of the flywheel, if the speed of the flywheel should not drop below 240 rev/min.

15. A full journal bearing with a journal of 75 mm diameter and a bearing of 75 mm length is subjected to a radial load of 2500 N at 400 rev/min. The lubricant is SAE 30 at 75°C having a viscosity of 16.5×10^{-3} kg/ms. Radial clearance is 0.03 mm. Eccentricity of the bearing is 0.27. Find the Sommerfeld number and the minimum film thickness.

16. A circular rod 50 mm in diameter and 200 mm long is welded to a plate by fillet welding all around the circumference as shown in Fig.16. The size of the weld is 15mm. The section modulus of the weld is 22000 mm^3. Determine the resultant stress in the weld.

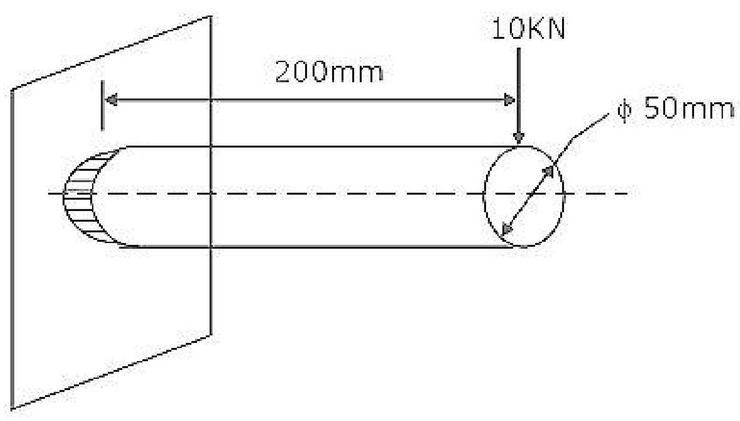

17. Two castings, a cube and a slab of the same material solidify under identical mould conditions. The volumes of the castings are equal but the slab dimensions are in the ratio of 1:2:4. Find the ratio of the solidification time of the cube to that of the slab.

ZOLLEGE.in

18. A cylindrical billet of 100mm diameter is forged from 50 mm height to 40 mm at 1000°C. The material has a constant flow stress of 80 MPa.

(a) Find the work of deformation.

(b) If a 10 kN drop-hammer is used to complete the reduction in one blow, what will be the height of the fall?

19. A 15 mm diameter HSS drill is used at a cutting speed of 20 m/min and a feed rate of 0.2 mm/rev. under these conditions, the drill life is 100 min. the drilling length of each hold is 45 mm and the time taken for idle motions is 20s. the tool change time 300 s. calculate

(a) number of holes produced using one drill and

(b) average production time per hole.

20. A conventional lathe and a CNC lathe are under consideration for machining a given part. The relevant data are shown below.

	Preparation Cost (Rs)	Production time per part (min)	Machine and operator cost (Rs.)
Conventional Lathe	30	30	75
CNC Lathe	150	15	120

Find the break-even quantity, above which CNC lathe is economical.

21. Solve the following linear programming problem by simplex method.

Maximize $4x_1 + 6x_2 + x_3$

Subject to $2x_1 - x_2 + 3x_3 \le 5$

$x_1, x_2, x_3 \ge 0$

(a) What is the solution to the above problem?

(b) Add the constraint $x_2 \le 2$ to the simple table of part (a) and find the solution.

22. A company places orders for supply of two items A and B. The order cost for each of the items is Rs.300/order. The inventory carrying cost is 18% of the unit price per year per unit. The unit prices of the items are Rs.40 and Rs.50 respectively. The annual demands are 10,000 and 20,000 respectively.

(a) Find the economic order quantities and the minimum total cost

(b) A supplier is willing to give a 1% discount on price, if both the items are ordered from him and if the order quantities for each item are 1000 units or more. Is it profitable to avail the discount?

ZOLLEGE.in