1.1 An excitation is applied to a system at t = T and its response is zero for $-\infty < t < T$. Such a system is

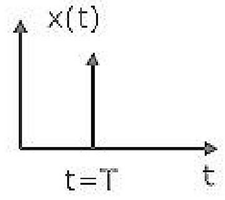

(a) non-causal system

(b) stable system

(c) causal system

(d) unstable system

1.2 In a series RLC high Q circuit, the current peaks at a frequency

(a) equal to the resonant frequency

(b) greater than the resonant frequency

(c) less than the resonant frequency

(d) none of the above

1.3 The voltage across an impedance in a network is $V(s) = z(s)I(s)$, where V(s), Z(s) are the Laplace transforms of the corresponding time function $v(t), z(t)$ and $i(t)$. The voltage $v(t)$ is:

(a) $v(t) = z(t).v(t)$

(b) $v(t) = \int_0^1 i(t).z(t-\tau)d\tau$

(c) $v(t) = \int_0^1 i(t).z(t+\tau)d\tau$

(d) $v(t) = z(t) + i(t)$

1.4 Two two-port networks are connected in cascade. The combination is to be represented as a single two-port network. The parameters of the network are obtained by multiplying the individual

(a) z-parameter matrix

(b) h-parameter matrix

(c) y-parameter matrix

(d) ABCD parameter matrix

1.5 The pole-zero pattern of a certain filter is shown in the figure below. The filter must be of the following type.

(a) low pass

(b) high pass

(c) all pass

(d) band pass

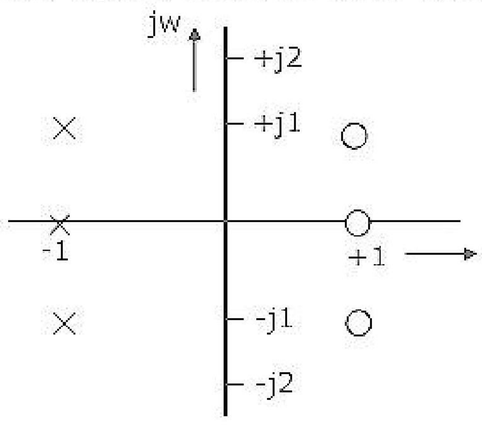

ZOLLEGE.in

1.6 The necessary and sufficient condition for a rational function of s. T(s) to be driving point impedance of an RC network is that all poles and zeros should be

(a) simple and lie on the negative axis in the s-plane

(b) complex and lie in the left half of the s-plane

(c) complex and lie in the right half of the s-plane

(d) simple and lie on the positive real axis of the s-plane

1.7 In the signal flow graph of Figure, the gain c/r will be

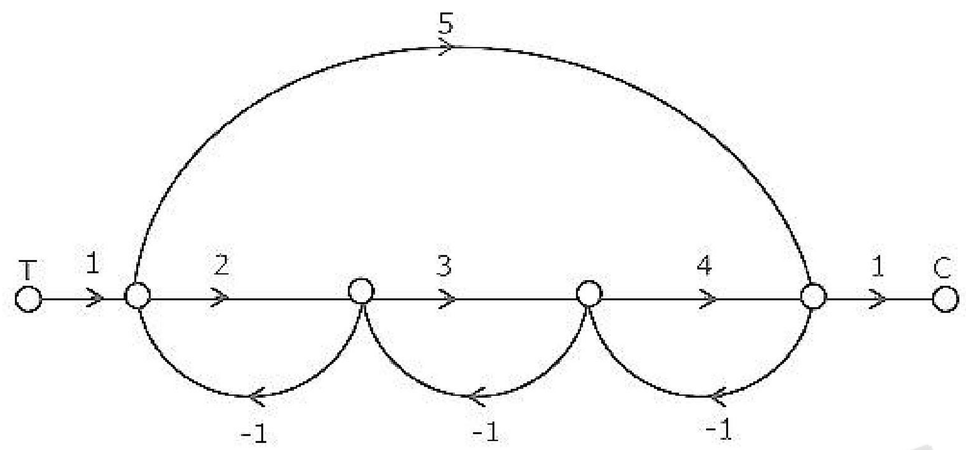

(a) $\frac{11}{9}$ (b) $\frac{22}{15}$ (c) $\frac{24}{23}$ (d) $\frac{44}{23}$

1.8 A second order system has a transfer function given by

$$G(s) = \frac{25}{s^2 + 8s + 25}$$

If the system, initially at rest is subjected to a unit step input at t = 0, the second peak in response will occur at

(a) π sec (b) $\frac{\pi}{3}$ sec (c) $\frac{2\pi}{3}$ sec (d) $\frac{\pi}{2}$ sec

1.9 The open loop transfer function of a feedback control system is:

$$G(s)H(s) = \frac{1}{(s+1)^3}$$

The gain margin of the system is:

(a) 2 (b) 4 (c) 8 (d) 16

1.10 A unity feedback control system has the open loop transfer function

$$G(s) = \frac{4(1+2s)}{s^2(s+2)}$$

If the input to the system is a unit ramp, the steady state error will be

(a) 0 (b) 0.5 (c) 2 (d) infinity

ZOLLEGE.in

1.11 The characteristic equation of a feedback control system is given by

$$s^3 + 5s^2 + (K + 6)s + K = 0$$

Where K > 0 is a scalar variable parameter. In the root loci diagram of the system the asymptotes of the root locus for large values of K meet at a point in the s-plane whose coordinates are

(a) (-3,0) (b) (-2,0) (c) (-1,0) (d) (2,0)

1.12 A linear second order single input continuous time system is described by the following set of differential equations

$$x_1(t) = -2x_1(t) + 4x_2(t)$$
$$x_2(t) = 2x_1(t) - x_2(t) + u(t)$$

Where $x_1(t)$ and $x_2(t)$ are the state variables and $u(t)$ is the control variable. The system is:

(a) controllable and stable (b) controllable but unstable

(c) uncontrollable and unstable (d) uncontrollable and stable

1.13 A linear time-invariant discrete-time system is described by the vector matrix difference equation

$$x(k+1) = F\underline{X}(k) + G\underline{u}(k)$$

Where $\underline{X}(k)$ is the state vector, F is an n × n constant matrix, G is a $(n \times r)$ constant matrix and $\underline{u}(k)$ is the control vector. The state transition matrix of the system is given by inverse Z-transform of

(a) ZI - F (b) (ZI – F) Z (c) $(ZI - F)^{-1} G$ (d) $(ZI - F)^{-1} Z$

1.14 A silicon sample is uniformly doped with 10^{16} phosphorous atoms/cm^3 and 2×10^{16} boron atoms/cm^3. If all the dopants are fully ionized, the material is

(a) n-type with carrier concentration of $10^{16} / cm^3$

(b) p-type with carrier concentration of $10^{16} / cm^3$

(c) p-type with carrier concentration of $2 \times 10^{16} / cm^3$

(d) T_2 will get damaged and T_1 will be safe

1.15 An n-type silicon sample, having electron mobility μ_n = twice the hole mobility μ_p, is subjected to a steady illumination such that the electron concentration doubles from its thermal equilibrium value. As a result, the conductivity of the sample increases by a factor of ...

ZOLLEGE.in

1.16 The small signal capacitances of an abrupt $P_1 - n$ junction is $1nF/Cm^2$ at zero bias. If the built in voltage is 1 volt, the capacitance at a reverse bias voltage of 99 volts is equal to ...

1.17 Referring to the figure. The switch S is in position 1 initially and steady state conditions exist from time t = 0 to $t = t_0$. The switch is suddenly thrown into position 2. The current 1 through the 10K resistor as a function of time t from t = 0, is .... (Give the sketch showing the magnitudes of the current at t = 0, $t = t_0$ and $t = \infty$)

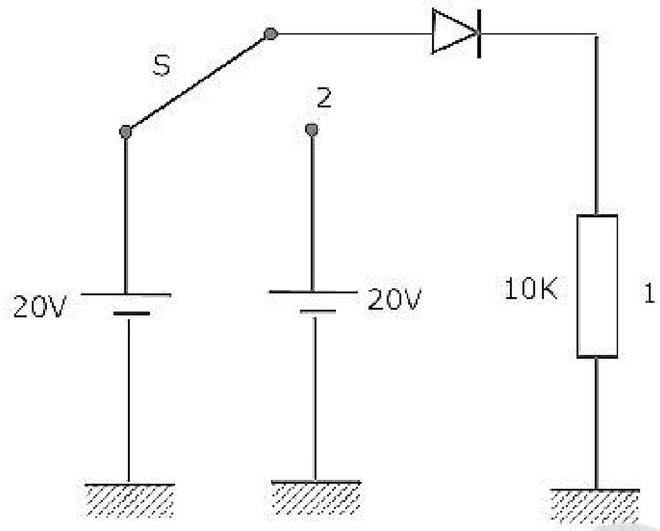

1.18 Discrete transistors T_1 and T_2 having maximum collector current rating of 0.75 amps are connected in parallel as shown in the figure. This combination is treated as a single transistor to carry a total current of 1 ampere, when biased with self bias circuit. When the circuit is switched on, T_1 draws 0.55 amps and T_2 draws 0.45 amps. If the supply is kept on continuously, ultimately it is very likely that

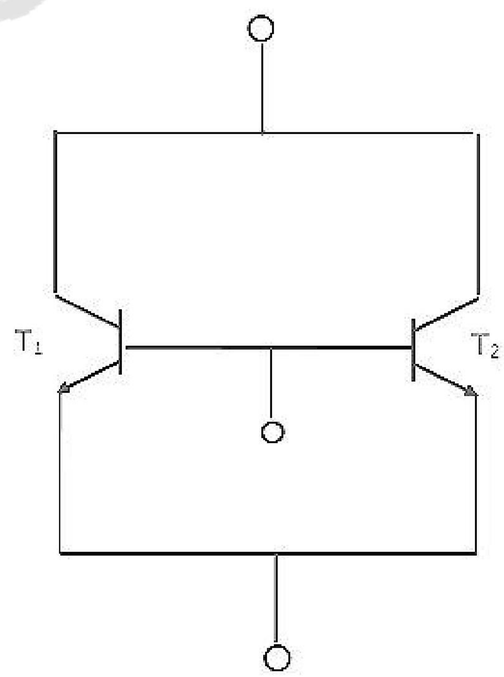

(a) both T_1 and T_2 get damaged
(b) both T_1 and T_2 will be safe
(c) T_1 will get damaged and T_2 will be safe
(d) T_2 will get damaged and T_1 will be safe

ZOLLEGE.in

1.19. The built-in potential of the gate junction of a n-channel JFET is 0.5 volts. The drain current saturates at $V_{DS} = 4.0$ volts when $V_{GS} = 0$. The pinch off voltage is _____.

1.20. In figure, all transistors are identical and have a high value of beta. The voltage V_{DC} is equal to _____.

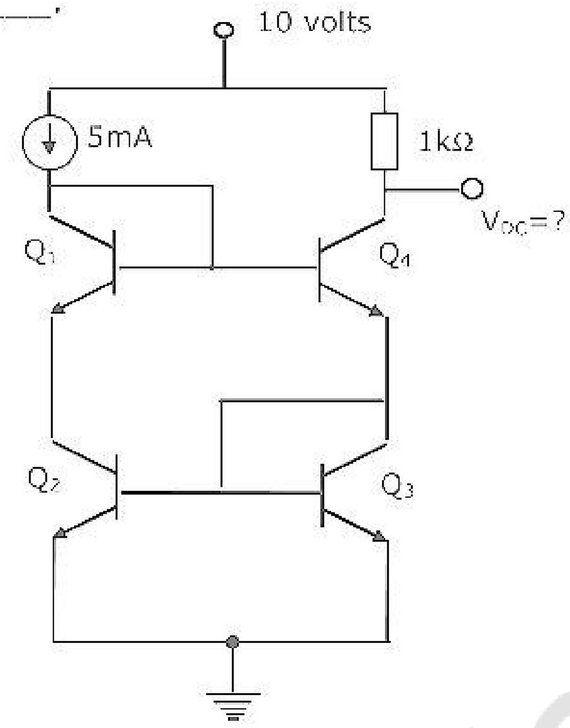

1.21. In figure, both transistors are identical and have a high value of beta. Take the dc base-emitter voltage drop as 0.7 volt and KT/q = 25 mV. The small signal low frequency voltage gain (V_o/V_i) is equal to _____

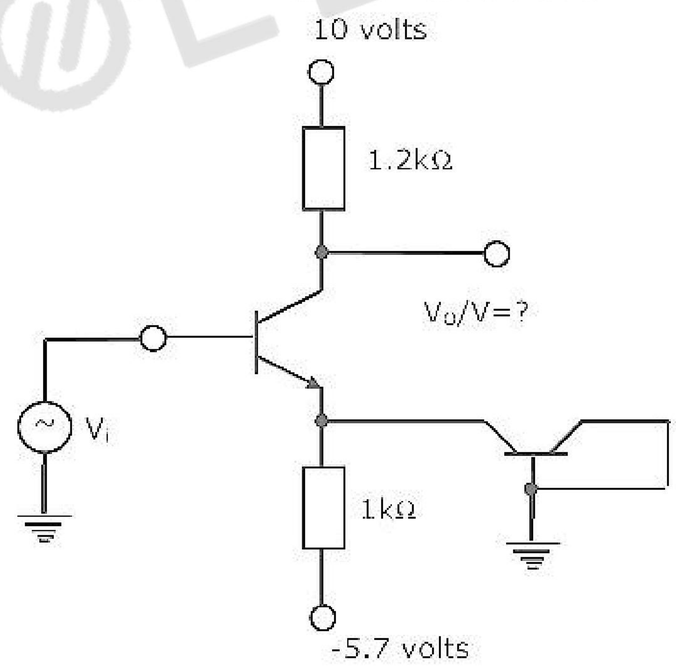

ZOLLEGE.in

1.22. In figure the input V_1 is a 100 Hz triangular wave having a peak to peak amplitude of 2 volts and an average value of zero volts. Given that the diode is ideal, the average value of the output V_0 is _____.

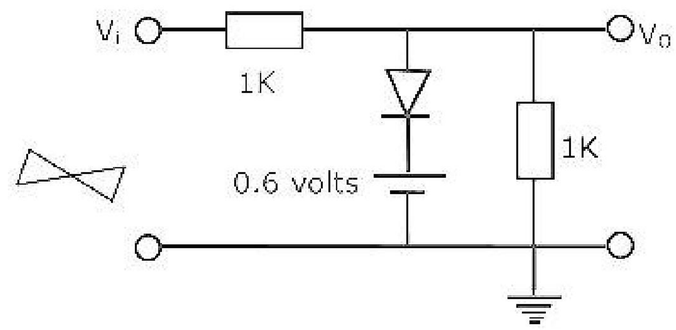

1.23. In figure, the n-channel MOSFETs are identical and their current voltage characteristics are given by the following expressions:

For $V_{DS}, I_D = \left[(V_{GS}-1)V_{DS} - \frac{V^2DS}{2}\right] mA$

For $V_{DS} \geq (V_{GS}-1), (V_{GS}-1) = (V_{GS}-1)^2\ mA$

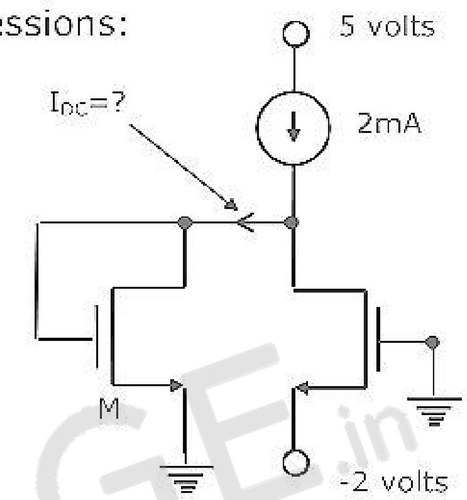

Where V_{GS} and V_{DS} are the gate source and drain source voltages respectively and I_0 is the drain current.

The current I_{DC} flowing through the transistor 'M' is equal to _____

1.24. In order that the circuit of Figure works properly as differentiator, it should be modified to _____ (draw the modified circuit)

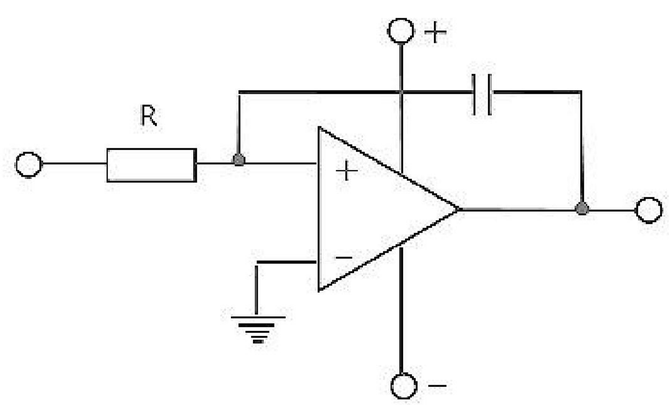

1.25 Two non-inverting amplifiers, one having a unity gain and the other having a gain of twenty are made using identical operational amplifiers. As a compared to the unity gain amplifier, the amplifier with gain twenty has

(a) less negative feedback
(b) greater input impedance
(c) less bandwidth
(d) none of the above

ZOLLEGE.in

1.26 Two dimensional addressing of 256 × 8 bit ROM using to 1 selectors requires ____ (how many?) NAND gates.

1.27 The CMOS equivalent of the following nMOS gate (in figure) is _____ (draw the circuit).

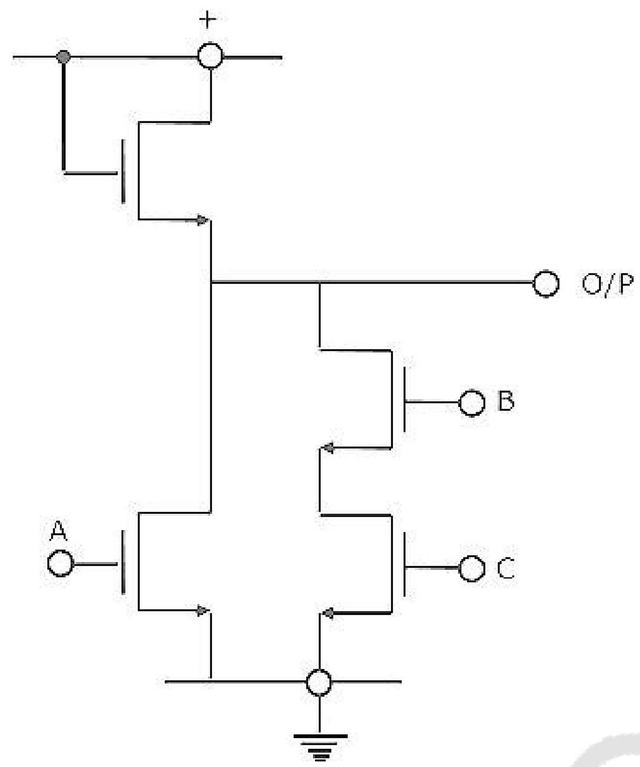

1.28 In figure, the Boolean expression for the output in terms of inputs A, B and C when the clock 'CK' is high, is given by _____

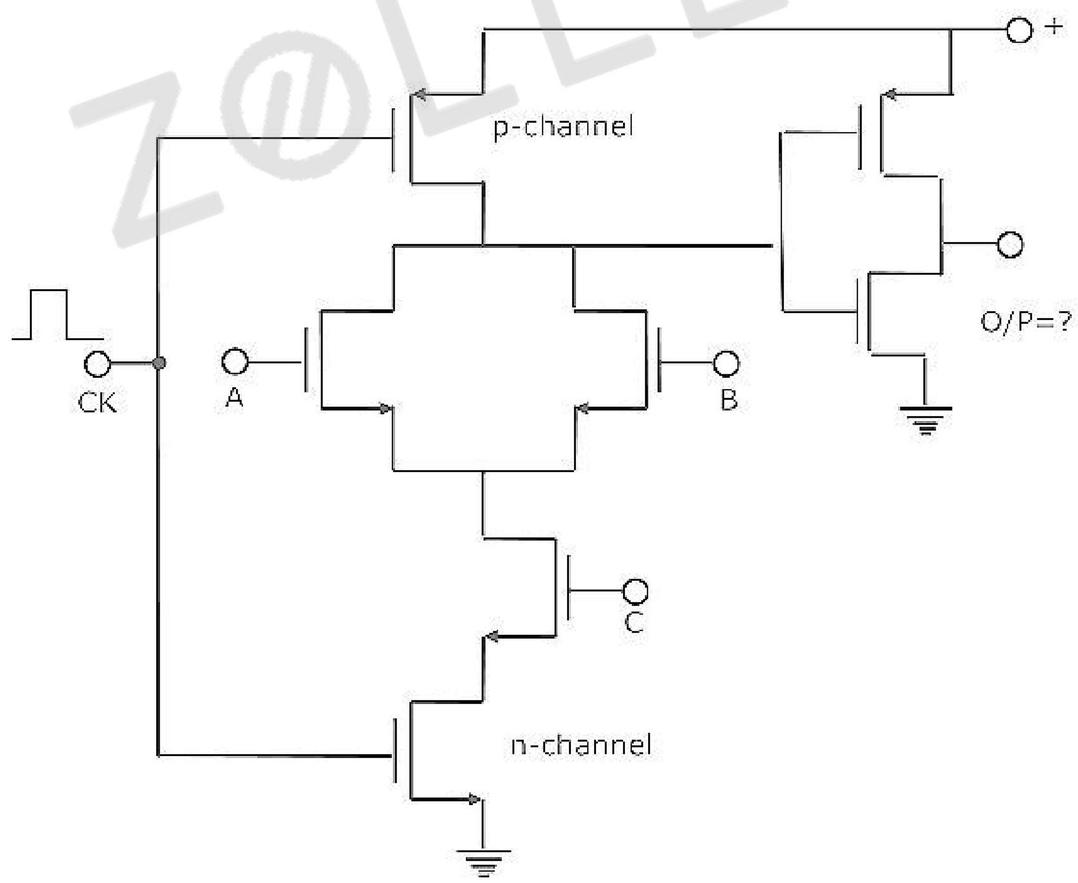

1.29 An S-R FLIP-FLOP can be converted into a T FLIP FLOP by connecting _____ to Q and _____ to Q.

ZOLLEGE.in

1.30 A bit stored in a FAMOS device can be erased by _____.

1.31 A signal has frequency components from 300 Hz to 1.8 KHz. The minimum possible rate at which the signal has to be sampled is _____.

1.32 A sequential multiplexer is connected as shown in figure. Each time the multiplexer receives the clock, it switches to the next channel (From 6 it goes to 1). If the input signals are

$$A = 5\cos 2\pi\left(4\times 10^3 t\right)$$

$$B = 2\cos 2\pi\left(3.8\times 10^3 t\right)$$

$$C = 6\cos 2\pi\left(2.2\times 10^3 t\right)$$

$$D = 4\cos 2\pi\left(1.7\times 10^3 t\right)$$

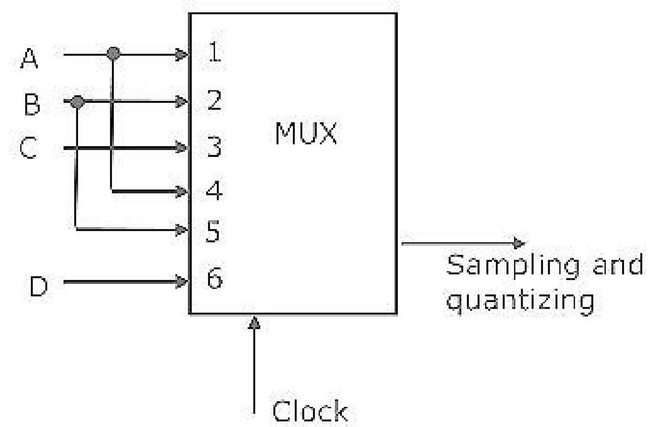

he minimum clock frequency should be _____ KHz.

1.33 For the signal constellation shown in figure below, the type of modulation is _____.

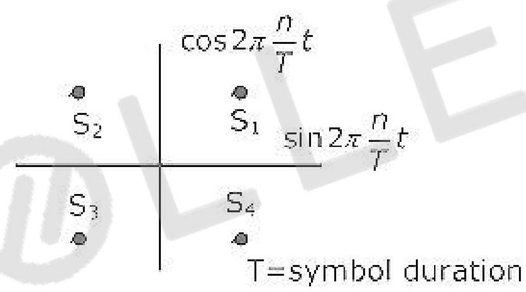

1.34 Two resistors R_1 and R_2 (in ohms) at temperatures T_1 and $T_2 K$ respectively, are connected in series. Their equivalent noise temperatures is _____ K.

1.35 A binary source has symbol probabilities 0.8 and 0.2. If extension coding (blocks of 4 symbols) is used. The lower and upper bounds on the average code word length are

(a) lower _____

(b) higher _____

1.36 In a reflex Klystron oscillator

(a) the maximum possible efficiency is 58%

(b) the frequency of oscillation varies linearly with the reflector voltage

(c) the power output varies continuously with reflector voltage

(d) the power output is maximum at fixed frequency.

ZOLLEGE.in

1.37 The input impedance of a short-circuited lossless transmission line quarter wave length is

(a) purely reactive (b) purely resistive

(c) infinite

(d) dependent on the characteristic impedance of the line.

1.38 The electric field component of a uniform plane electromagnetic wave propagating in the Y-direction in a lossless medium will satisfy the equation.

(a) $\frac{\partial^2 E_y}{\partial y^2} = \mu \in \frac{\partial^2 E_y}{\partial t^2}$ (b) $\frac{\partial^2 E_y}{\partial x^2} = \mu \in \frac{\partial^2 E_y}{\partial t^2}$

(c) $\frac{\partial^2 E_x}{\partial y^2} = \mu \in \frac{\partial^2 E_x}{\partial t^2}$ (d) $\frac{\sqrt{E_x^2 + E_z^2}}{\sqrt{H_x^2 + H_z^2}} = \sqrt{\frac{\mu}{\in}}$

1.39 A radio wave is incident on a layer of ionosphere at an angle of 30 degree with the vertical. If the critical frequency is 1.2 MHz, the maximum usable frequency is

(a) 1.2 MHz (b) 2.4 MHz (c) 0.6 MHz (d) 1.386 MHz

1.40 In a broad side array of 20 isotropic radiators, equally spaced at a distance of $\frac{\lambda}{2}$, the beam width between first nulls is

(a) 51.3 degrees (b) 11.46 degrees

(c) 22.9 degrees (d) 102.6 degrees

2. (a) Find the Laplace transform of the waveform $x(t)$ shown in figure.

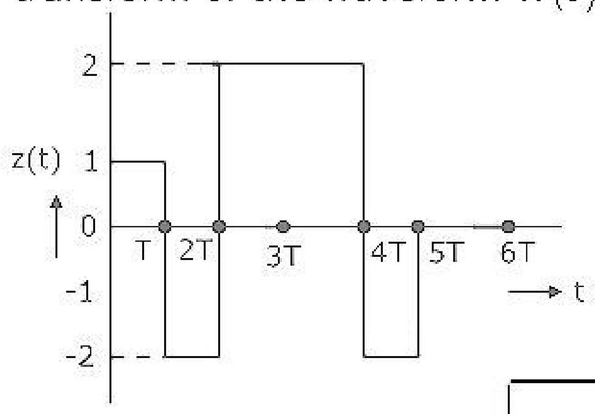

(b) The network shown in figure is initially under steady state condition with the switch in position 1. The switch is moved from position 1 to position 2 at t ≠ 0. Calculate the current $i(t)$ through R_1 after switching.

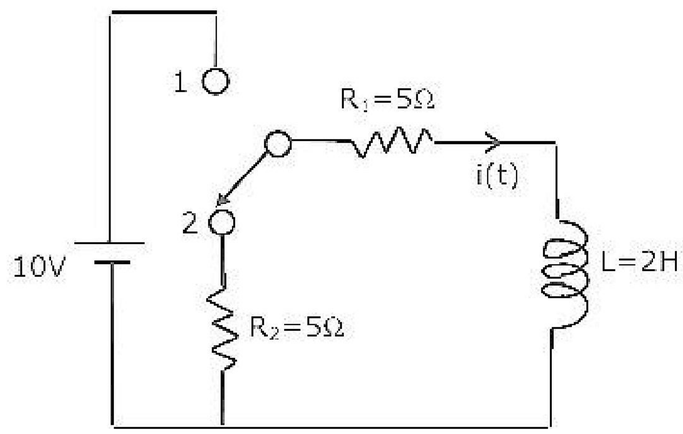

3. The open loop transfer function of a

ZOLLEGE.in

feedback control system incorporating a dead time element is given by

$$G(s) = \frac{Ke^{-Ts}}{s(s+1)}$$

Where K > 0, and T > 0 are variable scalar parameters.

(a) For a given value of T show that the closed loop system is stable for all value of $K < K_0$ where $K_0 = \omega_0 \operatorname{cosec} \omega_0 T$ and ω_0 is the smallest value of ω satisfying the equation $\omega = \cot \omega T$

4. The current I in a forward biased P^+N junction shown in figure (a) is entirely due to diffusion of holes from x = 0 to x = L. The injected hole concentration distribution in the m-region is linear as shown in figure (b), with $p(0) = \frac{10^{12}}{cm^3}$ and $L = 10^{-3} cm$. Determine:

(a) The current density in the diode assuming that the diffusion coefficient holes is 12 cm^2/sec.

(b) The velocity of holes in the n-region at x = 0.

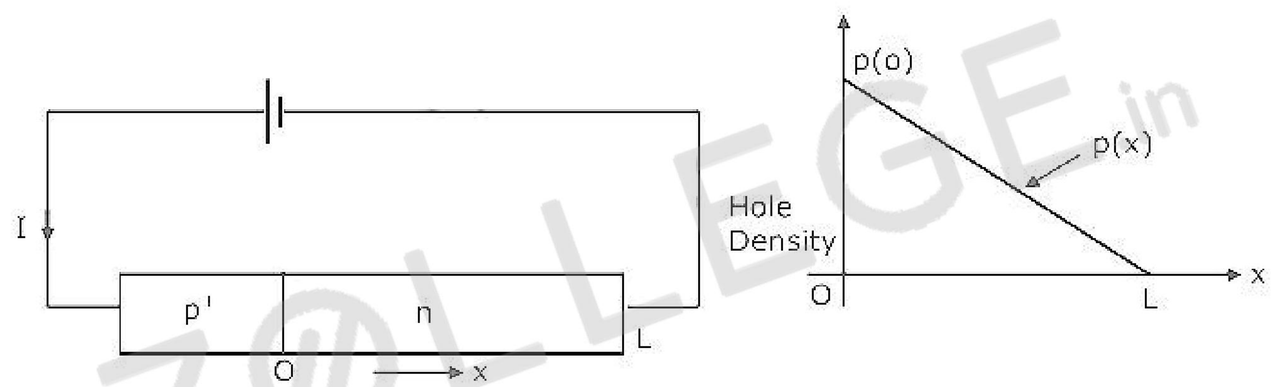

5. It is required to use a JFET of figure as linear resistor. The parameters of the JFET are as follows:

W = 100 μm, L = μm, a = 2.5μm.

The doping in the n-layer is $N_0 = 10^{16} / cm^3$ and the electron mobility is 1500 $cm^2 / V-sec$. The depletion layer width of each junction due to the built in potential is 0.25μm. The two p^+ – gate regions are connected together externally. The resistances of the regions outside the gate are negligible. Determine the minimum value of the linear resistor which can be realized using this JFET without forward biasing the gate junctions.

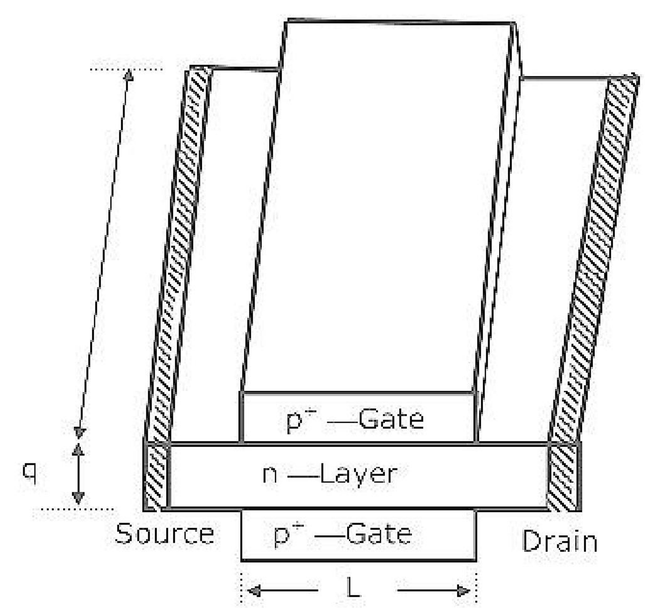

ZOLLEGE.in

6. In figure, the operational amplifier is ideal and its output can swing between – 15 and +15 volts. The input v_p which is zero for t < 0, is switched to 5 volts at the instant t = 0. Given that the output v_0 is +15 volts for t <0, sketch on the same diagram the waveforms of v_0 and v_i. You must give the values of important parameters of this sketch.

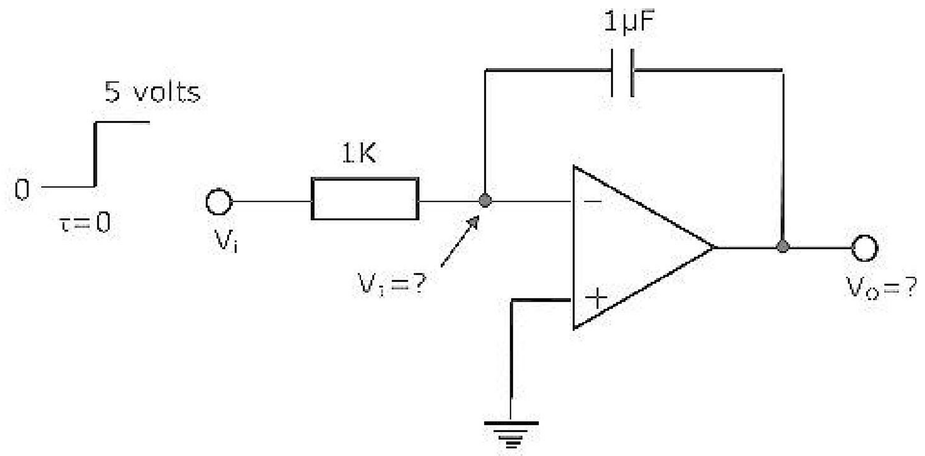

7. In figure, the operational amplifiers are ideal and their output can swing between -15 and +15 volts. Sketch on same diagram, the waveform of voltages V_1 and V_2 as a function of time. You must give the values of important parameters of this sketch.

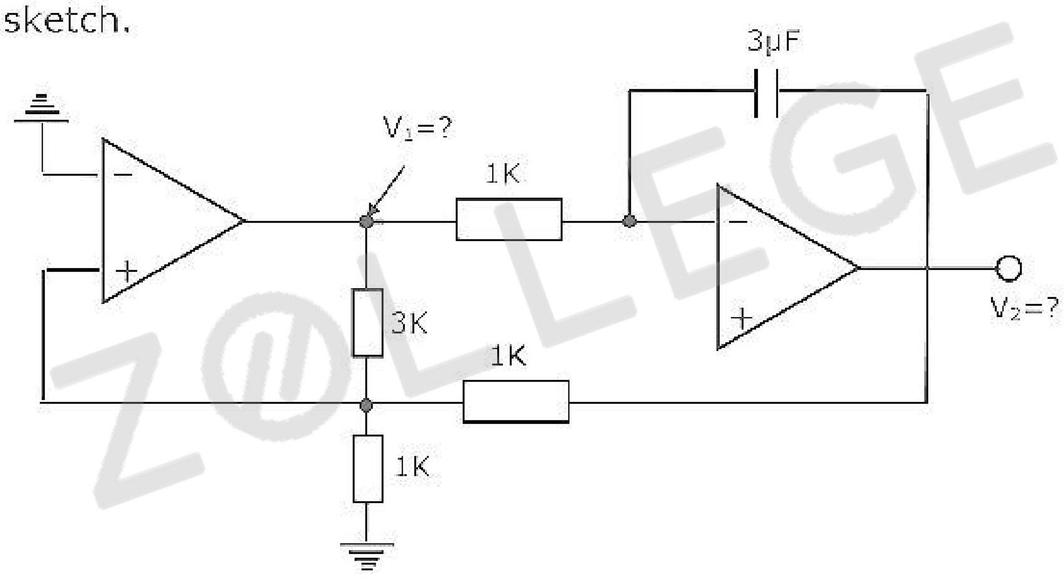

8. The program given below is run on an 8085 based microcomputer system. Determine the contents of the registers: PC, SP, B, C, H, L after a half instruction is executed.

```
LOC
2000        START     LXI SP 1000H
                      LXI H2F37 H
                      XRA A
                      MOV A, H
                      INX H
                      PUSH H
                      CZ 20 FF H
                      JMP 3000 H
                      HLT
            20FF      ADD H
```

ZOLLEGE.in

RZ
POP B
PUSH B
RMZ
HLT
3000
HLT

9. The four variable function f is given in terms of min-terms as:

$f(A,B,C,D) = \sum m(2,3,8,10,11,12,14,15)$.

Using the K-map minimize the function in the sum of products form. Also, given the realization using only two-input NAND gates.

10. (a) A signal A sin ω_m t is input to a square – law device $(e_0 - e_{m2})$. The output of which is given to an FM modulator as the modulating signal.

The frequency deviation characteristics of the FM modulator is $f = f_c + Ke(t)$.

Where $e(t)$ is the modulating signal and K is a constant.

Determine the FM signal and the frequency components in its spectrum.

(b) In the figure, $x(t)$ is the modulating signal and t_c is the carrier frequency. Determine the value of gain K so that the output is a suppressed carrier DSB signal.

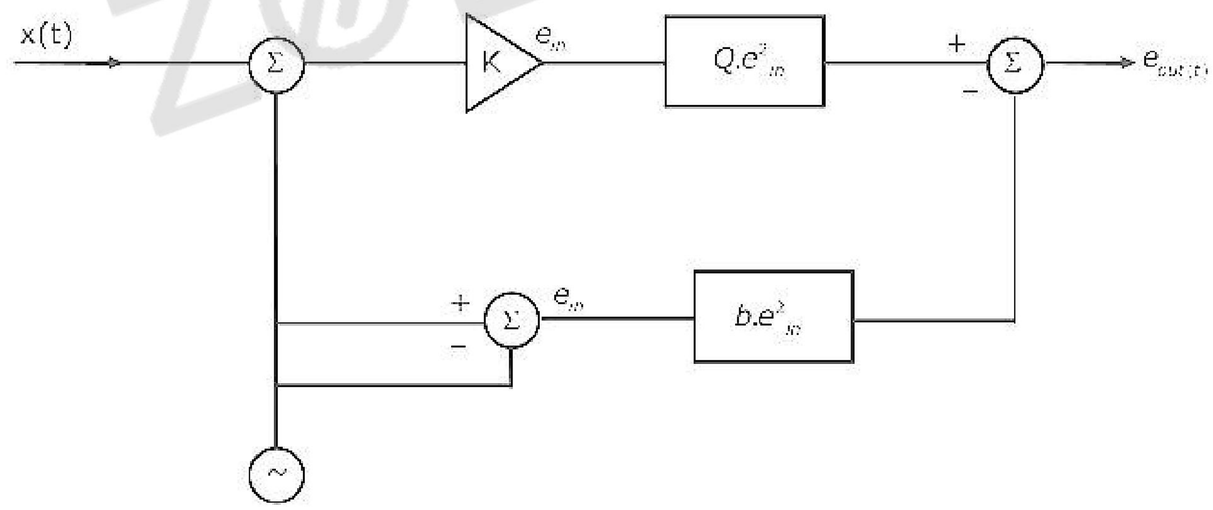

11. (a) A Gaussian random variable with zero mean and variance σ is input to a limiter with input output characteristic given by

$e_{out} = e_{in}$ for $|e_{in}| < \sigma$

$e_{out} = \sigma$ for $e_{in} \geq \sigma$

$e_{out} = -\sigma$ for $e_{in} \leq \sigma$

Determine the probability density function of the output random variable.

(b) A random process X(t) is wide sense stationary. If

ZOLLEGE.in

$Y(t) = x(t) - x(t-a)$

Determine the auto correlation function $R_y(i)$ and power spectral density $S_y(\omega)$ of $Y(t)$ in terms of those of $X(t)$.

12. A uniform plane electromagnetic wave traveling in free space enters into a lossless medium at normal incidence. In the medium its velocity reduces by 50% and in free space sets up a standing wave having a reflection coefficient of -0.125. Calculate the permeability and the permittivity of the medium.

13. In the radiation pattern of a 3-element array of isotropic radiators equally spaced at distances of $\frac{\lambda}{4}$ it is required to place a null at an angle of 33.56 degrees off the end-fire direction. Calculate the progressive phase shifts to be applied to the elements. Also calculate the angle at which the main beam is placed for this phase distribution.

ZOLLEGE.in

ZOLLEGE.in