Q.1 – Q.30 Carry One Mark Each

1. Consider the network graph shown in figure. Which one of the following is NOT a 'tree' of this graph?

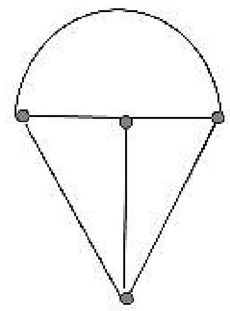

(a)

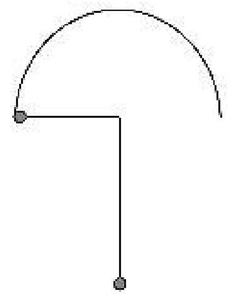

(b)

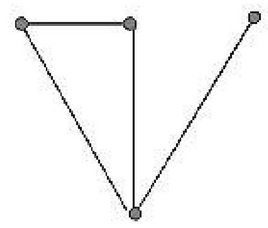

(c)

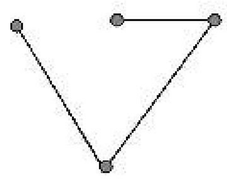

(d)

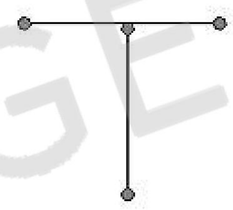

2. The equivalent inductance measured between the terminals 1 and 2 for the circuit shown in figure, is

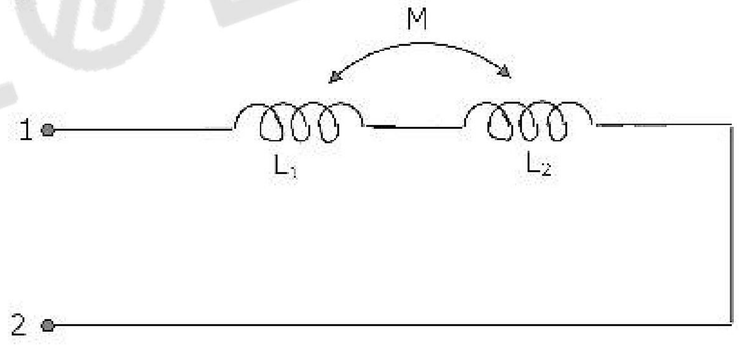

(a) $L_1 + L_2 + M$ (b) $L_1 + L_2 - M$ (c) $L_1 + L_2 + 2M$ (d) $L_1 + L_2 - 2M$

3. The circuit shown in Fig.Q.3, with R $= \frac{1}{3}$ W, $L = \frac{1}{4} H, C = 3F$ has input voltage $v(t) = \sin 2t$. The resulting current i(t) is

(a) $5\sin(2t + 53.1^\circ)$

(b) $5\sin(2t - 53.1^\circ)$

(c) $25\sin(2t + 53.1^\circ)$

(d) $25\sin(2t - 53.1^\circ)$

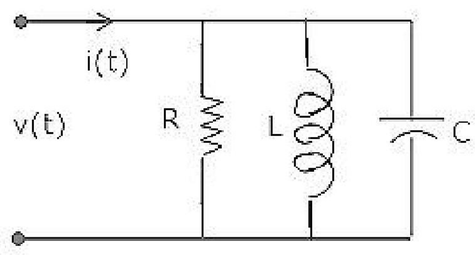

ZOLLEGE.in

4. For the circuit shown in Fig.Q.4, the time constant RC = 1ms. The input voltage is $v_i(t) = \sqrt{2}\sin 10^3 t$. The output voltage $v_0(t)$ is equal to

(a) $\sin(10^3 t - 45^\circ)$

(b) $\sin(10^3 t + 45^\circ)$

(c) $\sin(10^3 t - 53^\circ)$

(d) $\sin(10^3 t + 53^\circ)$

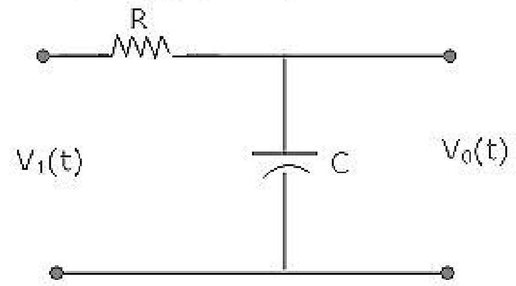

5. For the R-L circuit shown in Fig.Q.5, the input voltage $v_i(t) = u(t)$. The current i(t) is

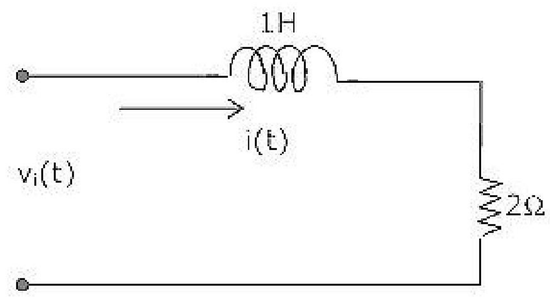

(a)

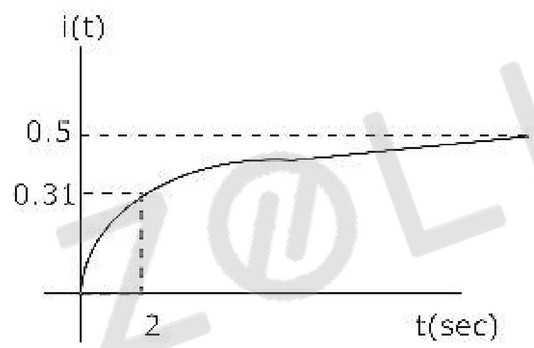

(b)

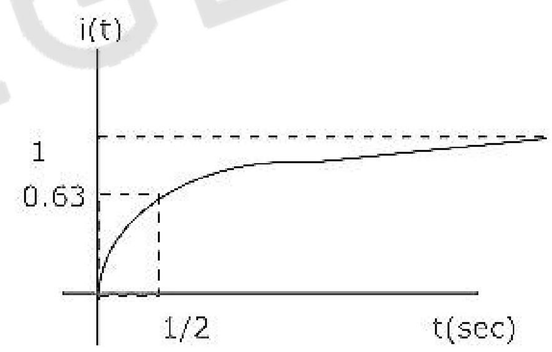

(c)

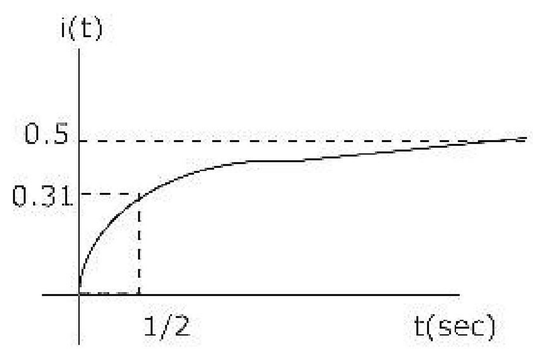

(d)

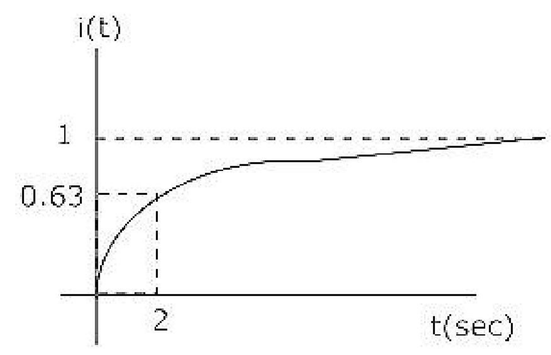

6. The impurity commonly used for realizing the base region of a silicon n-p-n transistor is

(a) Gallium (b) Indium (c) Boron (d) Phosphorus

ZOLLEGE.in

7. If for a silicon n-p-n transistor, the base-to-emitter voltage (V_{BE}) is 0.7V and the collector-to-base voltage (V_{CB}) is 0.2V, then the transistor is operating in the

(a) normal active mode
(b) saturation mode
(c) inverse active mode
(d) cutoff mode

8. Consider the following statements S_1 and S_2.

S_1: The β of a bipolar transistor reduces if the base width is increased.

S_2: The β of a bipolar transistor increases if the doping concentration in the base in increased

Which one of the following is correct?

(a) S_1 is FALSE and S_2 is TRUE
(b) both S_1 and S_2 are TRUE
(c) both S_1 and S_2 are FALSE
(d) S_1 is TRUE and S_2 is FALSE

9. An ideal op-amp is an ideal

(a) voltage controlled current source
(b) voltage controlled voltage source
(c) current controlled current source
(d) current controlled voltage source

10. Voltage series feedback (also called series shunt feedback) results in

(a) increase in both input and output impedances
(b) decrease in both input and output impedances
(c) increase in input impedance and decrease in output impedance
(d) decrease in input impedance and increase in output impedance

11. The circuit in Figure is a

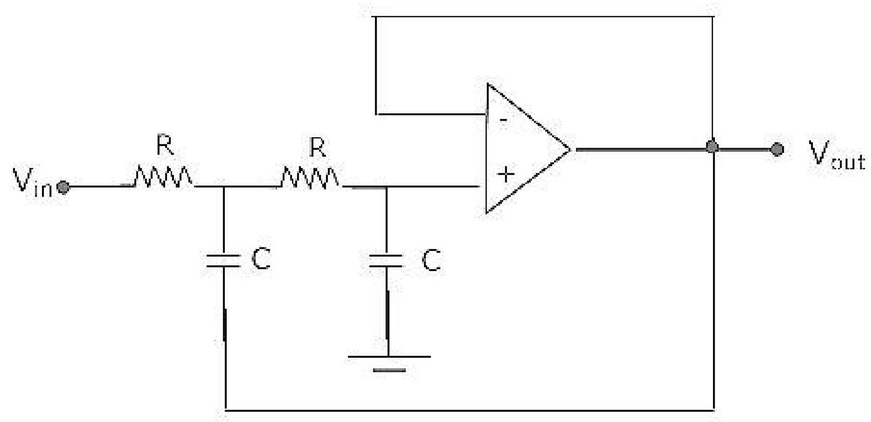

(a) low-pass filter
(b) high-pass filter
(c) band-pass filter
(d) band-reject filter

ZOLLEGE.in

12. Assuming V_{Cesat}=0.2V and β = 50, the minimum base current (I_B) required to drive the transistor in Fig.Q.12 to saturation is

(a) 56 μA

(b) 140 mA

(c) 60 μA

(d) 3 mA

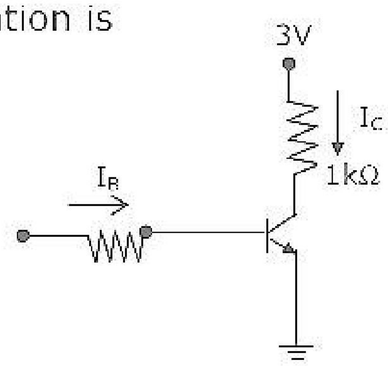

13. A master slave flip-flop has the characteristic that

(a) change in the input immediately reflected in the output

(b) change in the output occurs when the state of the master is affected

(c) change in the output occurs when the state of the slave is affected

(d) both the master and the slave states are affected at the same time

14. The range of signed decimal numbers that can be represented by 6-bite 1's complement number is

(a) -31 to +31 (b) -63 to +64 (c) -64 to +63 (d) -32 to +31

15. A digital system is required to amplify a binary-encoded audio signal. The user should be able to control the gain of the amplifier from a minimum to a maximum in 100 increments. The minimum number of bits required to encode, in straight binary is

(a) 8 (b) 6 (c) 5 (d) 7

16. Choose the correct one from among the alternatives A,B,C,D after matching an item from Group 1 with the most appropriate item in Group 2.

Group 1	Group 2
P. Shift register	1. Frequency division
Q. Counter	2. Addressing in memory chips
R. Decoder	3. Serial to parallel data conversion

(a) P – 3 Q – 2 R - 1

(b) P – 3 Q – 1 R - 2

(c) P – 2 Q – 1 R – 3

(d) P – 1 Q – 2 R - 2

ZOLLEGE.in

17. Figure shows the internal schematic of a TTL AND-OR-Invert (AOI) gate. For the inputs shown in Figure, the output Y is

(a) 0

(b) 1

(c) AB

(d) $\overline{AB}$

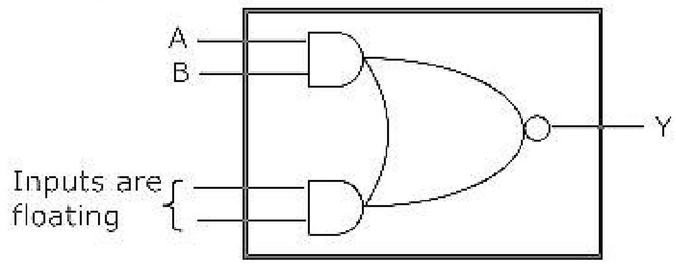

18. Figure is the voltage transfer characteristic of

(a) an NMOS inverter with enhancement mode transistor as load

(b) an NMOS inverter with depletion mode transistor as load

(c) A CMOS inverter

(d) A BJT inverter

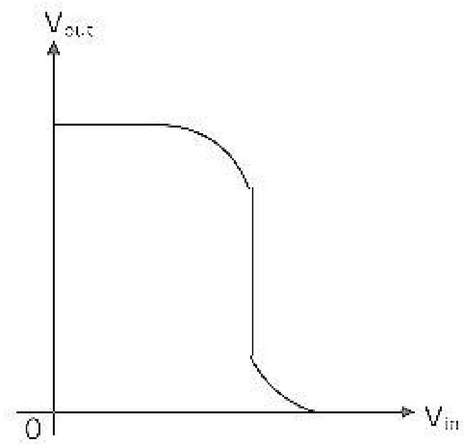

19. The impulse response h[n] of a linear time-invariant system is given by $h[n] = u[n+3] + u[n-2] - 2u[n-7]$

where u[n] is the unit step sequence. The above system is

(a) stable but not causal

(b) stable and causal

(c) causal but unstable

(d) unstable and not causal

20. The distribution function $f_x(x)$ of a random variable X is shown in Fig.Q.20. the probability that X = 1 is

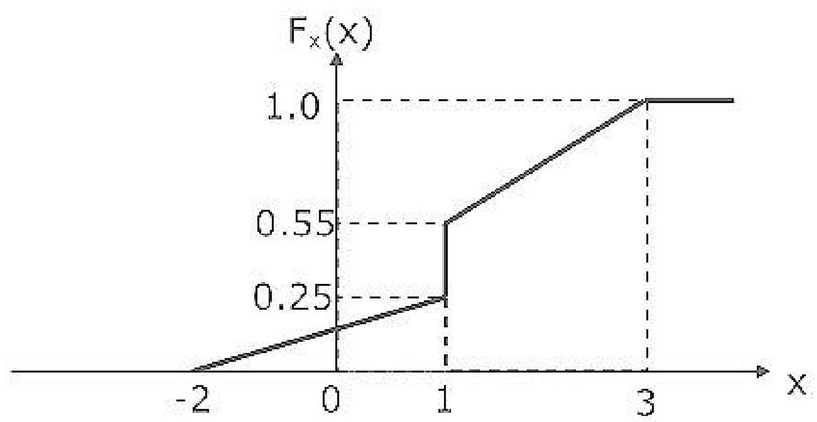

(a) zero

(b) 0.25

(c) 0.55

(d) 0.30

ZOLLEGE.in

21. The z-transfrom of a system is $H(z) = \frac{z}{z - 0.2}$

If the ROC is $|z| < 0.2$, then the impulse response of the system is

(a) $(0.2)^n u[n]$ (b) $(0.2)^n u[-n-1]$

(c) $-(0.2)^n u[n]$ (d) $-(0.2)^n u[-n-1]$

22. The Fourier transform of a conjugate symmetric function is always

(a) imaginary (b) conjugate anti-symmetric

(c) real (d) conjugate symmetric

23. The gain margin for the system with open-loop transfer function $G(s)H(z) = \frac{2(1+z)}{s^2}$, is

(a) ∞ (b) 0 (c) 1 (d) $-\infty$

24. Given the $G(s)H(z) = \frac{K}{s(s+1)(s+3)}$, the point of intersection of the asymptotes of the root loci with the real axis is

(a) -4 (b) 1.33 (c) -1.33 (d) 4

25. In a PCM system, if the code word length is increased from 6 to 8 bits, the signal to quantization noise ratio improves by the factor

(a) $\frac{8}{6}$ (b) 12 (c) 16 (d) 8

26. An AM signal is detected using an envelope detector. The carrier frequency and modulating signal frequency are 1 MHz and 2 KHz respectively. An appropriate value for the time constant of the envelope detector is

(a) 500 μsec (b) 20 μsec (c) 0.2 μsec (d) 1 μsec

27. An AM signal and a narrow-band FM signal with identical carriers, modulating signals and modulation indices of 0.1 are added together. The resultant signal can be closely approximated by

(a) broadband FM (b) SSB with carrier

(c) DSB-SC (d) SSB without carrier

ZOLLEGE.in

28. In the output of a DM speech encoder, the consecutive pulses are of opposite polarity during time interval $t_1 \le t \le t_2$. This indicates that during this interval

(a) the input to the modulator is essentially constant

(b) the modulator is going through slope overload

(c) the accumulator is in saturation

(d) the speech signal is being sampled at the Nyquist rate

29. The phase velocity of an electromagnetic wave propagating in a hallow metallic rectangular waveguide in the TE_{10} mode is

(a) equal to its group velocity

(b) less than the velocity of light in free space

(c) equal to the velocity of light in free space

(d) greater than the velocity of light in free space

30. Consider a lossless antenna with a directive gain of +6db. If 1mW of power is fed to it the total power radiated by the antenna will be

(a) 4mW (b) 1mW (c) 7mW (d) $\frac{1}{4} mW$

Q.31 – Q.90 Carry Two Marks Each

31. For the lattice circuit shown in Fig. Q.31, $Z_a = j2\Omega$ and $Z_b = 2\Omega$. The values of the open circuit impedance parameters $Z = \begin{bmatrix} Z_{11} & Z_{12} \\ Z_{21} & Z_{22} \end{bmatrix}$ are

(a) $\begin{bmatrix} 1-j & 1+j \\ 1+j & 1+j \end{bmatrix}$

(b) $\begin{bmatrix} 1-j & 1+j \\ 1+j & 1-j \end{bmatrix}$

(c) $\begin{bmatrix} 1+j & 1+j \\ 1-j & 1-j \end{bmatrix}$

(d) $\begin{bmatrix} 1+j & -1+j \\ 1-j & 1-j \end{bmatrix}$

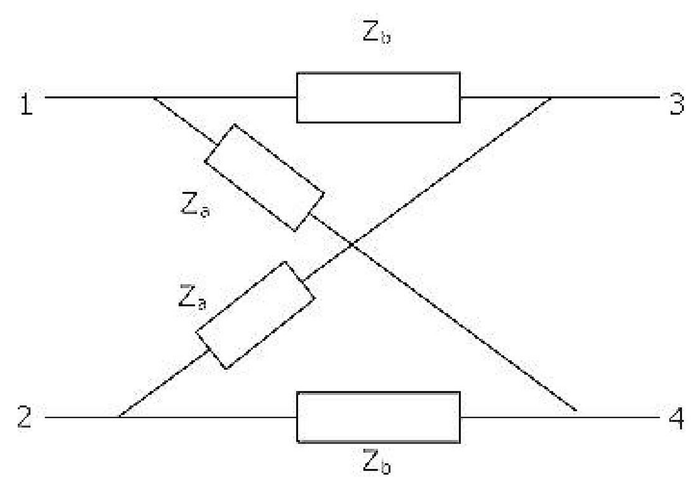

ZOLLEGE.in

32. The circuit shown in Fig.Q.32 has initial current $i_L(0^-) = 1A$ through the inductor and an initial voltage $V_c(0^-) = -1V$ across the capacitor. For input v(t) = u(t), the Laplace transform of the current i(t) for t ≥0 is

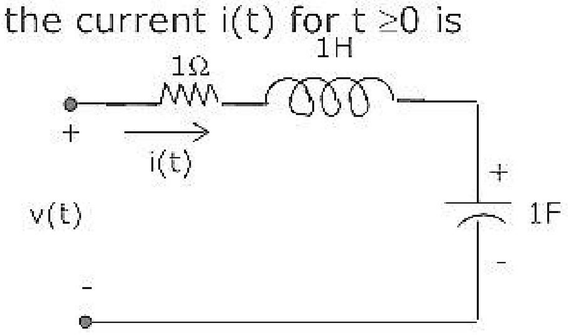

(a) $\frac{s}{s^2+s+1}$ (b) $\frac{s+2}{s^2+s+1}$ (c) $\frac{s-2}{s^2+s+1}$ (d) $\frac{s-2}{s^2+s-1}$

33. Consider the Bode magnitude plot shown in Fig.33. The transfer function H(s) is

(a) $\frac{(s+10)}{(s+1)(s+100)}$

(b) $\frac{10(s+10)}{(s+1)(s+100)}$

(c) $\frac{10^2(s+1)}{(s+10)(s+100)}$

(d) $\frac{10^3(s+100)}{(s+1)(s+10)}$

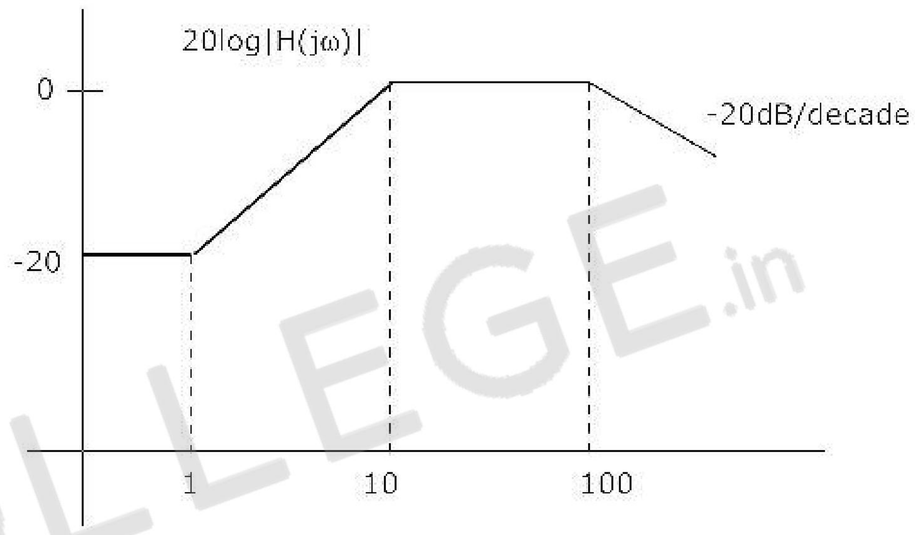

34. The transfer function $H(s) = \frac{V_0(s)}{V_i(s)}$ of an R-L-C circuit is given by

$$H(s) = \frac{10^6}{s^2 + 20s + 10^6}$$

the Quality factor (Q-factor) of this circuit is

(a) 25 (b) 50 (c) 100 (d) 5000

35. For the circuit shown in Fig.Q.35, the initial conditions are zero. Its transfer function $H(s) = \frac{V_c(s)}{V_i(s)}$ is

(a) $\frac{1}{s^2 + 10^6 s + 10^6}$ (b) $\frac{10^6}{s^2 + 10^3 s + 10^6}$

(c) $\frac{10^3}{s^2 + 10^3 s + 10^6}$ (d) $\frac{10^6}{s^2 + 10^6 s + 10^6}$

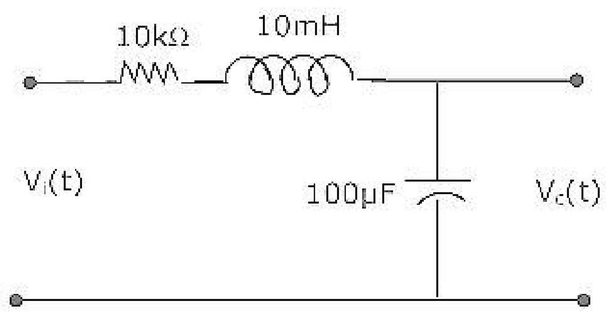

ZOLLEGE.in

36. A system described by the following differential equation $\frac{d^2y}{dt^2} + 3\frac{dy}{dt} + 2y = x(t)$ is initially at rest. For input x(t) = 2u(t), the output y(t) is

(a) $(1 - 2e^{-t} + e^{-2t})u(t)$
(b) $(1 + 2e^{-t} - e^{-2t})u(t)$
(c) $(0.5 + e^{-t} + 1.5e^{-2t})u(t)$
(d) $(0.5 + 2e^{-t} + 2e^{-2t})u(t)$

37. Consider the following statements S_1 and S_2

S_1: At the resonant frequency the impedance of a series R-L-C circuit is zero.

S_2: In a parallel G-L-C circuit, increasing the conductance G results in increase in its Q factor.

Which one of the following is correct?

(a) S_1 is FALSE and S_2 is TRUE
(b) both S_1 and S_2 are TRUE
(c) S_1 is TRUE and S_2 is FALSE
(d) both S_1 and S_2 are FALSE

38. In an abrupt p-n junction, the doping concentrations on the p-side and n-side are $N_A = 9 \times 10^{16} / cm^3$ and $N_D = 1 \times 10^{16} / cm^3$ respectively. The p-n junction is reverse biased and the total depletion width is 3 μm. The depletion width on the p-side is

(a) 2.7 μm
(b) 0.3 μm
(c) 2.25 μm
(d) 0.75 μm

39. The resistivity of a uniformly doped n-type silicon sample is 0.5Ω-cm. If the electron mobility (μ_n) is 1250 cm^2/V-sec and the charge of an electron is 1.6×10^{-19} Coulomb, the donor impurity concentration (N_D) in the sample is

(a) $2 \times 10^{16} / cm^3$
(b) $1 \times 10^{16} / cm^3$
(c) $2.5 \times 10^{15} / cm^3$
(d) $2 \times 10^{15} / cm^3$

40. Consider an abrupt p-junction. Let V_{bi} be the built-in potential of this junction and V_R be the applied reverse bias. If the junction capacitance (C_1) is 1 pF for $V_{bi} + V_R = 1V$, then for $V_{bi} + V_R = 4V$, C_j will be

(a) 4 pF
(b) 2 pF
(c) 0.25 pF
(d) 0.5 pF

41. Consider the following statements S_1 and S_2.

S_1: The threshold voltage (V_T) of a MOS capacitor decreases with increase in gate oxide thickness

S_2: The threshold voltage (V_T) of a MOS capacitor decreases with increase in substrate doping concentration.

Which one of the following is correct?

(a) S_1 is FALSE and S_2 is TRUE
(b) both S_1 and S_2 are TRUE
(c) S_1 is TRUE and S_2 is FALSE
(d) both S_1 and S_2 are FALSE

ZOLLEGE.in

42. The drain of an n-channel MOSFET is shorted to the gate so that $V_{GS} = V_{DS}$. The threshold voltage (V_T) of MOSFET is 1V. If the drain current (I_D) is 1 mA for V_{GS} = 2V, then for V_{GS} = 3V, I_D is

(a) 2 mA (b) 3 mA (c) 9 mA (d) 4 mA

43. The longest wavelength that can be absorbed by silicon, which has the bandgap of 1.12eV, is 1.1μm. If the longest wavelength that can be absorbed by another material is 0.87 μm, then the bandgap of this material is

(a) 1.416 eV (b) 0.886 eV (c) 0.854 eV (d) 0.706 eV

44. The neutral base width of a bipolar transistor, biased in the active region, is 0.5 μm. the maximum electron concentration and the diffusion constant in the base are $10^{14}/cm^3$ and D_n = 25 cm^2/sec respectively. Assuming negligible recombination I the base, the collector current density is (the electron charge is 1.6×10^{-19} coulomb)

(a) 800 A/cm^2 (b) 8 A/cm^2 (c) 200 A/cm^2 (d) 2 A/cm^2

45. Assuming that the β of the transistor is extremely large and V_{BE} = 0.7V, I_c and V_{CE} in the circuit shown in Figure, are

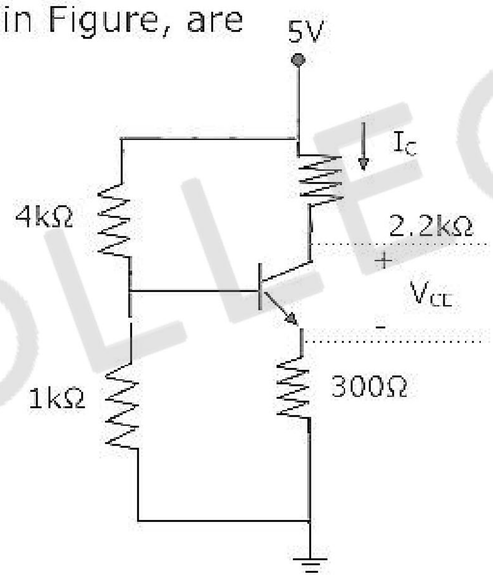

(a) $I_C = 1mA, V_{CE} = 4.7V$ (b) $I_C = 0.5mA, V_{CE} = 3.75V$

(c) $I_C = 1mA, V_{CE} = 2.5V$ (d) $I_C = 0.5mA, V_{CE} = 3.9V$

46. A bipolar transistor is operating in the active region with a collector current of 1mA. Assuming that the β of the transistor is 100 and the thermal voltage (V_T) is 25 mV, the transconductance (g_m) and the input resistance (r_π) of the transistor in the common emitter configuration, are

(a) $g_m = 25mA/V$ and $r_p = 15.625kW$ (b) $g_m = 40mA/V$ and $r_p = 4.0kW$

(c) $g_m = 25mA/V$ and $r_p = 2.5kW$ (d) $g_m = 40mA/V$ and $r_p = 2.5kW$

ZOLLEGE.in

47. The value of C required for sinusoidal oscillations of frequency 1kHz in the circuit of Fig.Q.47 is

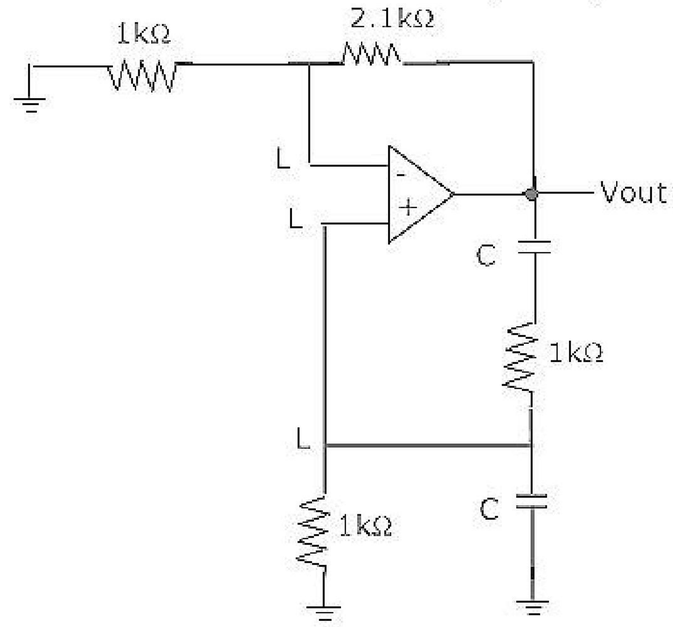

(a) $\frac{1}{2p}\,mF$

(b) $2p\,mF$

(c) $\frac{1}{2p\sqrt{6}}\,mF$

(d) $2p\sqrt{6}\,mF$

48. In the op-amp circuit given in Fig.Q.48, the load current I_L is

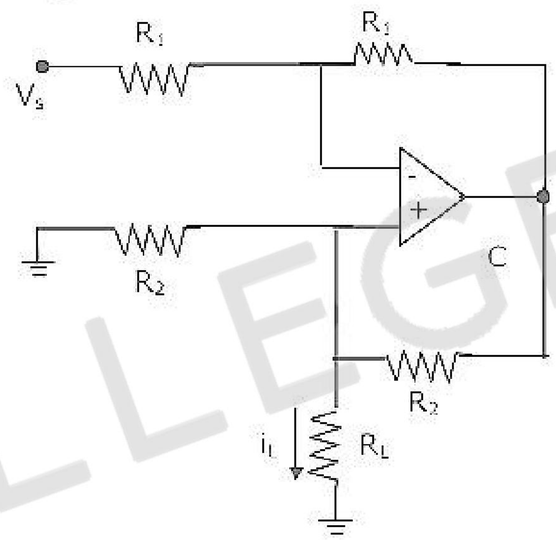

(a) $-\frac{v_s}{R_2}$

(b) $\frac{v_s}{R_2}$

(c) $-\frac{v_s}{R_L}$

(d) $\frac{v_s}{R_L}$

49. In the voltage regulator shown in Fig.Q.49, the load current can vary from 100mA to 500mA. Assuming that the Zener diode is ideal (i.e., the Zener knee current is negligibly small and Zener resistance is zero in the breakdown region), the value of R is

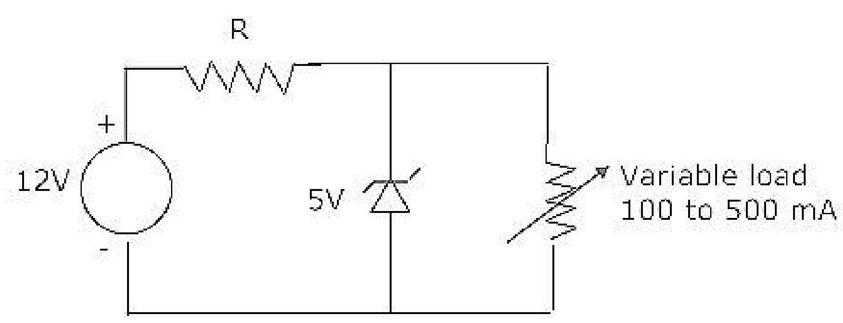

(a) 7Ω

(b) 70Ω

(c) $\frac{70}{3}$ W

(d) 14Ω

50. In a full-wave rectifier using two ideal diodes, V_{dc} and V_m are the dc and peak values of the voltage respectively across a resistive load. If PIV is the peak inverse voltage of the diode, then the appropriate relationships for this rectifier are

(a) $V_{dc} = \frac{V_m}{p}, PIV = 2V_m$

(b) $V_{dc} = 2\frac{V_m}{p}, PIV = 2V_m$

ZOLLEGE.in

(c) $V_{dc} = 2\frac{V_m}{p}, PIV = V_m$ (d) $V_{dc} = \frac{V_m}{p}, PIV = V_m$

51. The minimum number of 2 to 1 multiplexers required to realize a 4 to 1 mutliplexer is

(a) 1 (b) 2 (c) 3 (d) 4

52. The Boolean expression AC + $B\overline{C}$ is equivalent to

(a) $\overline{A}C + B\overline{C} + AC$ (b) $\overline{B}C + AC + B\overline{C} + \overline{A}C\overline{B}$

(c) $AC + B\overline{C} + \overline{B}C + ABC$ (d) $ABC + \overline{A}B\overline{C} + AB\overline{C} + AB\overline{C}$

53. 11001, 1001 and 111001 correspond to the 2's complement representation of which one of the following sets of number?

(a) 25, 9 and 57 respectively (b) -6, -6 and –6 respectively

(c) -7, -7 and –7 respectively (d) -25, -9 and –57 respectively

54. The 8255 Programmable Peripheral Interface is used as described below.

I. An A/D converter is interfaced to a microprocessor through an 8255. the conversion is initiated by a signal from the 8255 on Port C. A signal on Port C causes data to be strobed into Port A.

II. Two computers exchange data using a pair of 8255s. Port A works as a bi-directional data port supported by appropriate handshaking signals.

The appropriate modes of operation of the 8255 for I and II would be

(a) Mode 0 for I and Mode 1 for II (b) Mode 1 for I and Mode 0 for II

(c) Mode 2 for I and Mode 0 for II (d) Mode 2 for I and Mode 1 for II

55. The number of memory cycles required to execute the following 8085 instructions

I. LDA 3000H

II. LXI D, FOF 1H

Would be

(a) 2 for I and 2 for II (b) 4 for I and 3 for II

(c) 3 for I and 3 for II (d) 3 for I and 4 for II

ZOLLEGE.in

56. In the modulo-6 ripple counter shown in Figure, the output of the 2-input gate is used to clear the J-K flip-flops.

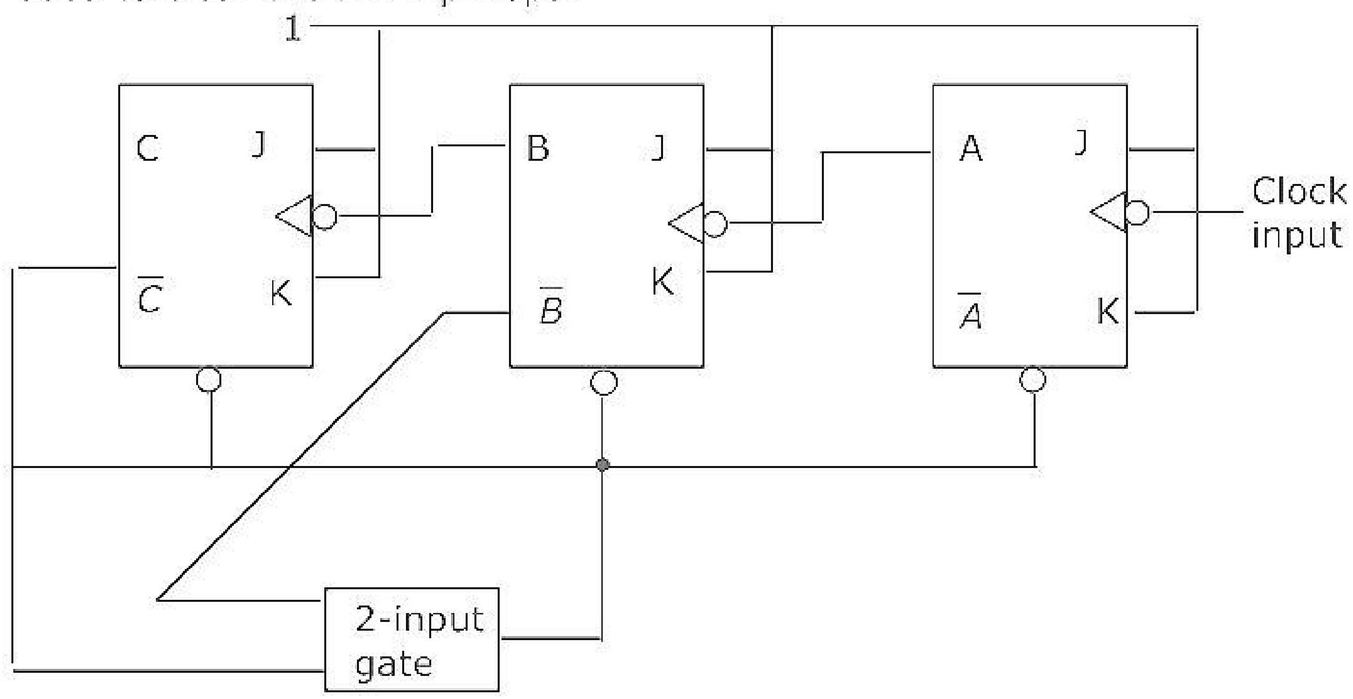

The 2-input gate is:

(a) a NAND gate (b) a NOR gate (c) an OR gate (d) an AND gate

57. Consider the sequence of 8085 instructions given below.

LXI H, 9258 MOV A, M, CMA, MOV M, A

Which one of the following is performed by this sequence?

(a) contents of location 9258 are moved to the accumulator

(b) contents of location 9258 are compared with the contents of the accumulator

(c) contents of location 8529 are complemented and stored in location 8529

(d) contents of location 5892 are complemented and stored in location 5892

58. A Boolean function f of two variables x and y is defined as follows:

$f(0,0) = f(0,1) = f(1,1)=1; f(1,0) = 0$

Assuming complements of x and y are not available, a minimum cost solution for realizing f using only 2-input NOR gates and 2-input OR gates (each having unit cost) would have a total cost of

(a) 1 unit (b) 4 unit (c) 3 unit (d) 2 unit

59. It is desired to multiply the numbers 0AH by 0BH and store the result in the accumulator. The numbers are available in registers B and C respectively. A part of the 8085 program for this purpose is given below:

MVI A, 00H

Loop; - - - - - - - - - -

.....

ZOLLEGE.in

.....

HLT END

The sequence of instruction to the complete the program would be

(a) JNZ LOOP, ADD B, DCR C

(b) ADD B, JNZ LOOP, DCR C

(c) DCR C, JNZ LOOP, ADD B

(d) ADD B, DCR C, JNZ LOOP

60. A 1 kHz sinusoidal signal is ideally sampled at 1500 samples/sec and the sampled signal is passed through an ideal low-pass filter with cut-off frequency 800 Hz. The output signal has the frequency

(a) zero Hz (b) 0.75 kHz (c) 0.5 kHz (d) 0.25 kHz

61. A rectangular pulse train s(t) as shown in Fig.Q.61 is convolved with the signal $\cos^2(4p' 10^3 t)$. the convolved signal will be a

(a) DC

(b) 12 kHz sinusoid

(c) 8 kHz sinusoid

(d) 14 kHz sinusoid

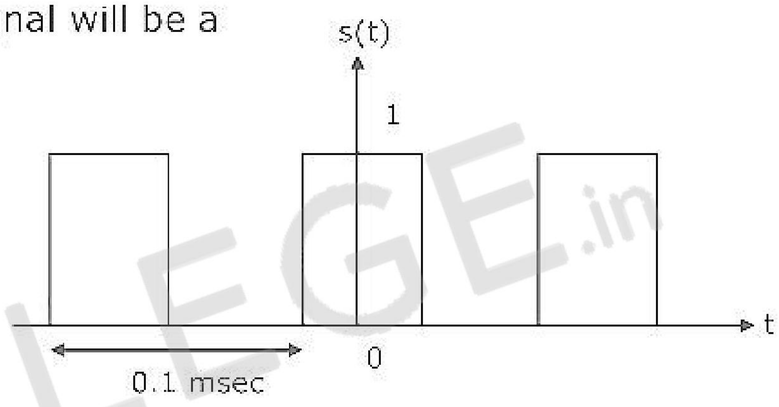

62. Consider the sequence $x[n] = \{4 - j5 \;\; 1 + j2 \;\; 4\}$

The conjugate anti-symmetric part of the sequence is

(a) [-4 – j2.5 j2 4 – j2.5]

(b) [– j2.5 1 j2.5]

(c) [– j5 j2 0]

(d) [-4 1 4]

63. A casual LTI system is described by the difference equation

$2y[n] = a\,y[n-2] - 2x[n] + b\,x[n-1]$

the system is stable only if

(a) $|a| = 2, \quad |b| < 2$

(b) $|a| > 2, \quad |b| > 2$

(c) $|a| < 2$, any value of b

(d) $|b| < 2$, any value of a

64. A causal system having the transfer function $H(s) = \dfrac{1}{s+2}$ is excited with 10u(t). The time at which the output reaches 99% of its steady state value is

ZOLLEGE.in

(a) 2.7 sec (b) 2.5 sec (c) 2.4 sec (d) 2.1 sec

65. The impulse response h[n] of a linear time invariant system is given as

$$h[n] = \begin{cases} -2\sqrt{2} & n = 1, -1 \\ 4\sqrt{2} & n = 2, -2 \\ 0, & \text{otherwise} \end{cases}$$

If the input to the above system is the sequence $e^{\frac{jpn}{4}}$, then the output is

(a) $4\sqrt{2}e^{\frac{jpn}{4}}$ (b) $4\sqrt{2}e^{-\frac{jpn}{4}}$ (c) $4e^{\frac{jpn}{4}}$ (d) $-4e^{\frac{jpn}{4}}$

66. Let x(t) and y(t) (with Fourier transforms X(f) and Y(f) respectively) be related as shown in Figure.

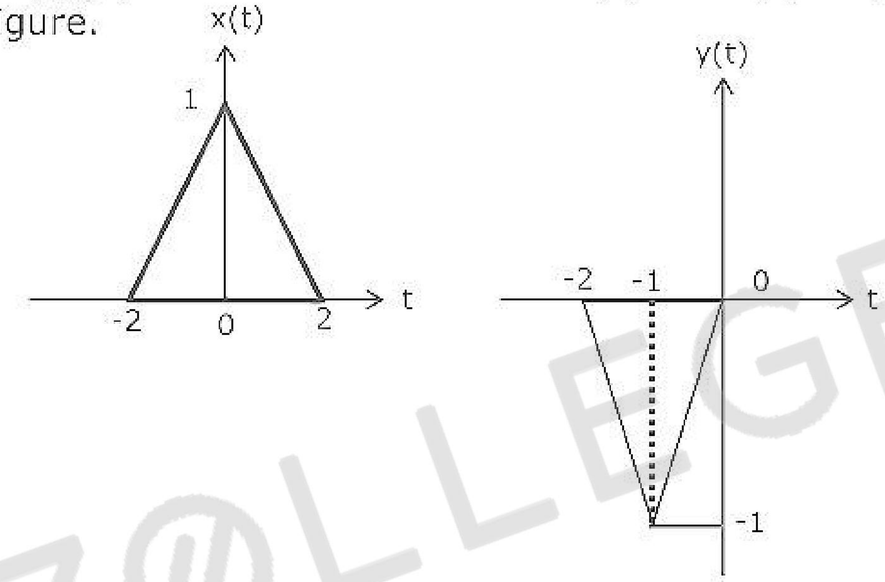

Then Y(f) is

(a) $-\frac{1}{2}X\left(\frac{f}{2}\right)e^{-j2pf}$ (b) $-\frac{1}{2}X\left(\frac{f}{2}\right)e^{j2pf}$ (c) $-X\left(\frac{f}{2}\right)e^{j2pf}$ (d) $-X\left(\frac{f}{2}\right)e^{-j2pf}$

67. A system has poles at 0.01 Hz, 1 Hz and 80 Hz; zeros at 5 Hz, 100 Hz and 200 Hz. The approximate phase of the system response at 20 Hz is

(a) -90° (b) 0° (c) 90° (d) -180°

68. Consider the signal flow graph shown in Figure. The gain $\frac{x_5}{x_1}$ is

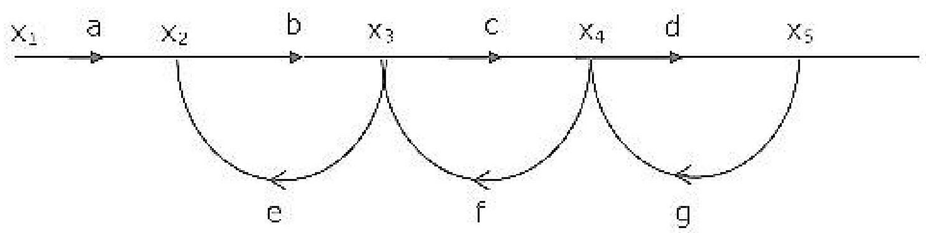

(a) $\frac{1-(be+cf+dg)}{abc}$ (b) $\frac{bedg}{1-(be+cf+dg)}$

ZOLLEGE.in

(c) $\dfrac{abcd}{1-(be+cf+dg)+bedg}$ (d) $\dfrac{1-(be+cf+dg)+bedg}{abcd}$

69. If $A = \begin{bmatrix} 2 & 2 \\ 1 & -3 \end{bmatrix}$, then sin At is

(a) $\dfrac{1}{3}\begin{bmatrix} \sin(-4t)+2\sin(-t) & -2\sin(-4t)+2\sin(-t) \\ \sin(-4t)+\sin(-t) & 2\sin(-4t)+\sin(-t) \end{bmatrix}$

(b) $\begin{bmatrix} \sin(-2t) & \sin(2t) \\ \sin(t) & \sin(-3t) \end{bmatrix}$

(c) $\dfrac{1}{3}\begin{bmatrix} \sin(4t)+2\sin(t) & 2\sin(-4t)+2\sin(-t) \\ \sin(-4t)+\sin(t) & 2\sin(4t)+\sin(t) \end{bmatrix}$

(d) $\dfrac{1}{3}\begin{bmatrix} \cos(-t)+2\cos(t) & -2\cos(-4t)+2\sin(-t) \\ \cos(-4t)+\sin(-t) & -2\cos(-4t)+\cos(-t) \end{bmatrix}$

70. The open loop transfer function of a unity feedback system is $G(s) = \dfrac{K}{s(s^2+s+2)(s+3)}$. The range of K for which the system is stable is

(a) $\dfrac{21}{44} > K > 0$ (b) $13 > K > 0$ (c) $\dfrac{21}{4} < K < ¥$ (d) $-6 < K < ¥$

71. For the polynomial $P(s) = s^5 + s^4 + 2s^3 + 2s^2 + 3s + 15$, the number of roots which lie in the right half of the s-plane is

(a) 4 (b) 2 (c) 3 (d) 1

72. The state variable equations of a system are:

1. $x_1 = -3x_1 - x_2 + u$
2. $x_2 = 2x_1$

$y = x_1 + u$

the system is

(a) controllable but not observable (b) observable but not controllable

(c) neither controllable nor observable (d) controllable and observable

73. Given $A = \begin{bmatrix} 1 & 0 \\ 0 & 1 \end{bmatrix}$, the state transition matrix e^{At} is given by

(a) $\begin{bmatrix} 0 & e^{-t} \\ e^{-t} & 0 \end{bmatrix}$ (b) $\begin{bmatrix} e^{t} & 0 \\ 0 & e^{t} \end{bmatrix}$ (c) $\begin{bmatrix} e^{-t} & 0 \\ 0 & e^{-t} \end{bmatrix}$ (d) $\begin{bmatrix} 0 & e^{t} \\ e^{t} & 0 \end{bmatrix}$

ZOLLEGE.in

74. Consider the signal x(t) shown in Fig.Q.74. Let h(t) denote the impulse response of the filter matched to x(t), with h(t) being non-zero only in the interval 0 to 4 sec. The slop of h(t) in the interval 3 < t < sec is

(a) $\frac{1}{2}\,\text{sec}^{-1}$

(b) $-1\,\text{sec}^{-1}$

(c) $-\frac{1}{2}\,\text{sec}^{-1}$

(d) $1\,\text{sec}^{-1}$

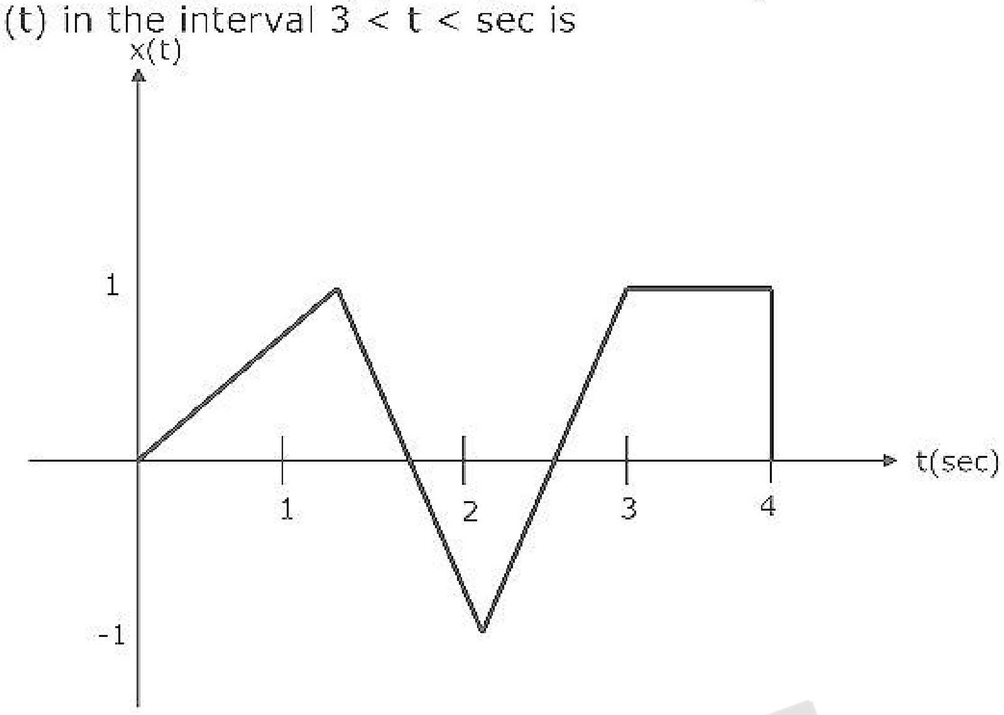

75. A 1mW video signal having a bandwidth of 100 MHz is transmitted to a receiver through a cable that has 40 dB loss. If the effective one-sided noise spectral density at the receiver is 10^{-20} Watt/Hz, then the signal to noise ratio at the receiver is

(a) 50 db (b) 30 db (c) 40 db (d) 60 db

76. A 100 MHz carrier of 1 V amplitude and a 1 MHz modulating signal of 1 V amplitude are fed to a balanced modulator. The output of the modulator is passed through an ideal high-pass filter with cut-off frequency of 100 MHz. The output of the filter is added with 100 MHz signals of 1 V amplitude and 90° phase shift as shown in Fig.Q.76. The envelope of the resultant signal is

(a) constant

(b) $\sqrt{1+\sin(2p\,\acute{}\,10^6 t)}$

(c) $\sqrt{\frac{5}{4}-\sin(2p\,\acute{}\,10^6 t)}$

(d) $\sqrt{\frac{5}{4}+\cos(2p\,\acute{}\,10^6 t)}$

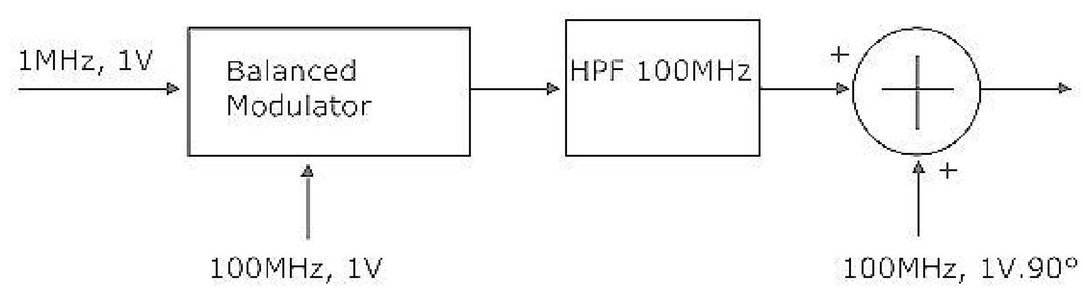

77. Two sinusoidal signals of same amplitude and frequencies 10 kHz and 10.1 kHz are added together. The combined signal is given to an ideal frequency detector. The output of the detector is

(a) 0.1 kHz sinusoid (b) 20.1 kHz sinusoid

(c) a linear function of time (d) a constant

ZØLLEGE.in

78. Consider a binary digital communication system with equally likely 0's and 1's. When binary 0 is transmitted the voltage at the detector input can lie between the level s-0.25V and +0.25V with equal probability: when binary 1 is transmitted, the voltage at the detector can have any value between 0 and 1 V with equal probability. If the detector has a threshold of 2.0V (i.e., if the received signal is greater than 0.2 V, the bit is taken as 1), the average bit error probability is

(a) 0.15 (b) 0.2 (c) 0.05 (d) 0.5

79. A random variable X with uniform density in the interval 0 to 1 is quantized as follows:

If $0 \le X \le 0.3$, $x_q = 0$

If $0.3 < X \le 1$, $x_q = 0.7$

Where x_q is the quantized value of X

The root-mean square value of the quantization noise is

(a) 0.573 (b) 0.198 (c) 2.205 (d) 0.266

80.

Group 1	Group 2
1. FM	P. Slope overload
2. DM	Q. μ-law
3. PSK	R. Envelope detector
4. PCM	S. Capture effect
	T. Hilbert transform
	U. Matched filter

(a) 1 – T 2 – P 3 – U 4 - S (b) 1 – S 2 – U 3 – P 4 - T

(c) 1 – S 2 – P 3 – U 4 - Q (d) 1 – U 2 – R 3 – S 4 - Q

81. Three analog signals, having bandwidths 1200 Hz, 600 Hz and 600 Hz, are sampled at their respective Nyquist rates, encoded with 12 bit words, and time division multiplexed. The bit rate for the multiplexed signal is

(a) 115.2 kbps (b) 28.8 kbps (c) 57.6 kbps (d) 38.4 kbps

ZOLLEGE.in

82. Consider a system shown in Fig.Q.82. Let X(f) and Y(f) denote the Fourier transforms of x(t) and y(t) respectively. The ideal HPF has the cutoff frequency 10 kHz.

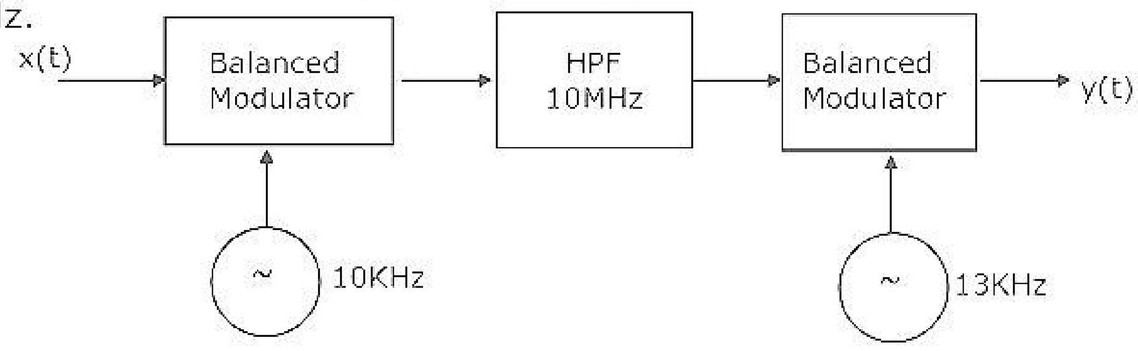

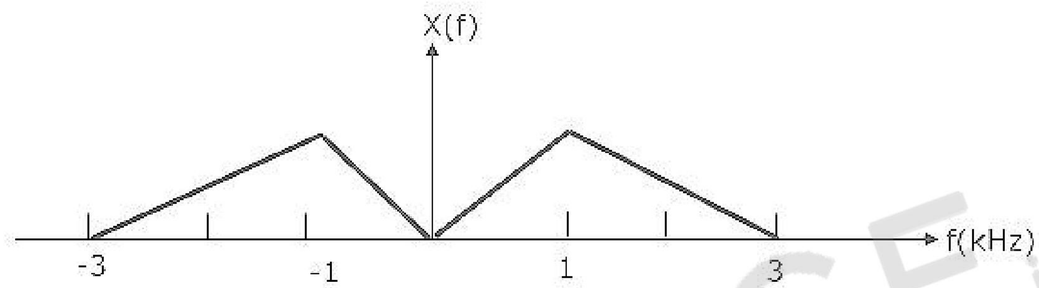

The positive frequencies where Y(f) has spectral peaks are

(a) 1 kHz and 24 kHz (b) 2 kHz and 24 kHz

(c) 1 kHz and 14 kHz (d) 2 kHz and 14 kHz

83. A parallel plate air-filled capacitor has plate area of 10^{-4} m^2 and plate separation of 10^{-3} m. It is connected to a 0.5 V, 3.6 GHz source. The magnitude of the displacement current is $\varepsilon_0 = \frac{1}{36}\pi \cdot 10^{-9} F/m$

(a) 10 mA (b) 100 mA (c) 10 A (d) 1.59 mA

84. A source produces binary data at the rate of 10 kbps. The binary symbols are represented as shown in Figure.

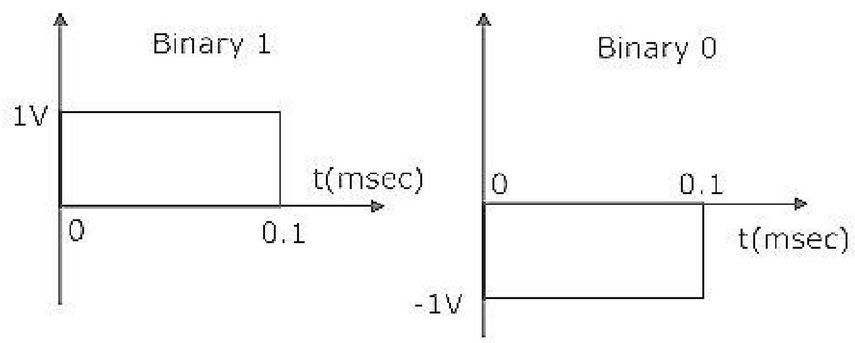

The source output is transmitted using two modulation schemes, namely Binary PSK (BPSK) and Quadrature PSK (QPSK). Let B_1 and B_2 be the bandwidth

ZOLLEGE.in

requirements of BPSK and QPSK respectively. Assuming that the bandwidth of the above rectangular pulses is 10 kHz, B_1 and B_2 are

(a) B_1 = 20 kHz, B_2= 20 kHz (b) B_1 = 10 kHz, B_2= 20 kHz

(c) B_1 = 20 kHz, B_2= 10 kHz (d) B_1 = 10 kHz, B_2= 10 kHz

85. Consider a 300Ω quarter-wave long (at 1 GHz) transmission line as shown in Figure. It is connected to a 10V, 50Ω sources at one end and is left open circuited at the other end. The magnitude of the voltage at the open circuit end of the line is

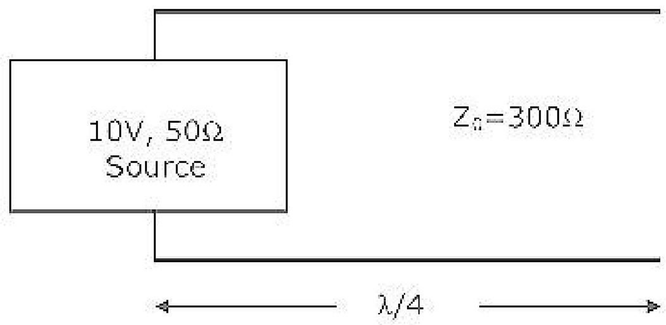

(a) 10 V (b) 5 V (c) 60 V (d) $\frac{60}{7}V$

86. In a microwave test bench, why is the microwave signal amplitude modulated at 1 kHz

(a) To increase the sensitivity of measurement

(b) To transmit the signal to a far-off place

(c) To study amplitude modulation

(d) Because crystal detector fails at microwave frequencies.

87. If $\vec{E} = (\hat{a}_x + j\hat{a}_y)e^{jkz - jwt}$ and $\vec{H} = \left(\frac{k}{wm}\right)(\hat{a}_y + j\hat{a}_x)e^{jkz - jwt}$, the time averaged Poynting vector is

(a) null vector (b) $\left(\frac{k}{wm}\right)\hat{a}_z$ (c) $\left(\frac{2k}{wm}\right)\hat{a}_z$ (d) $\left(\frac{k}{2wm}\right)\hat{a}_z$

88. Consider an impedance Z = R + jX marked with point P in an impedance Smith chart as shown in Fig.Q.88. The movement from point P along a constant resistance circle in the clockwise direction by an angle 45° is equivalent to

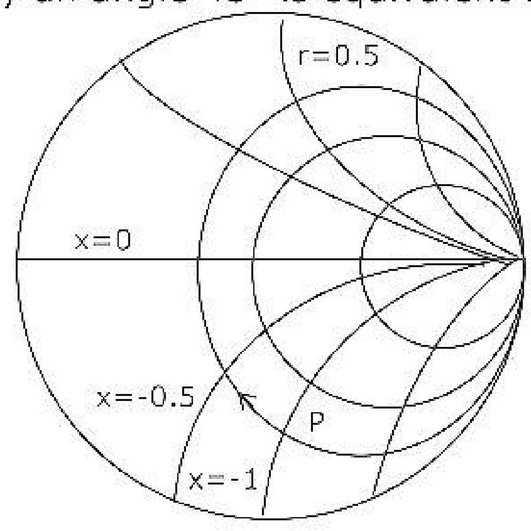

(a) adding an inductance in series with Z

(b) adding a capacitance in series with Z

ZOLLEGE.in

(c) adding an inductance in shunt across Z

(d) adding a capacitance in shunt across Z

89. A plane electromagnetic wave propagating in free space in incident normally on a large slab of loss-less, non-magnetic, dielectric material with $\varepsilon > \varepsilon_0$. Maxima and minima are observed when the electric field is measured in front of the slab. The maximum electric field is found to be 5 times the minimum field. The intrinsic impedance of the medium should be

(a) 120 $\pi\Omega$ (b) 60 $\pi\Omega$ (c) 600 $\pi\Omega$ (d) 24 $\pi\Omega$

90. A lossless transmission line is terminated in a load which reflects a part of the incident power. The measured VSWR is 2. the percentage of the power that is reflected back is

(a) 57.73 (b) 33.33 (c) 0.11 (d) 11.11

ZOLLEGE.in

ZOLLEGE.in