# JAM 2006

# PHYSICS TEST PAPER

ZOLLEGE.in



ZOLLEGE.in

## Useful Data

1. Speed of light in free space, $c = 3 \times 10^{8}$ m s$^{-1}$
2. Planck's constant, $h = 6.6 \times 10^{-34}$ J s
3. Electron charge, $e = 1.6 \times 10^{-19}$ C
4. Electron mass, $m_e = 9.1 \times 10^{-31}$ kg
5. Use $e^3 \approx 20$

**NOTE: Attempt ALL the 25 questions. Questions 1-15 (objective questions) carry *six* marks each and questions 16-25 (subjective questions) carry *twenty one* marks each.**
**Write the answers to the objective questions in the *Answer Table for Objective Questions* provided on page 12 only.**

1. In a crystalline solid, the energy band structure (E-k relation) for an electron of mass $m$ is given by $E = \dfrac{\hbar^2 k(2k-3)}{2m}$. The effective mass of the electron in the crystal is

(A) $m$

(B) $\dfrac{2}{3}m$

(C) $\dfrac{m}{2}$

(D) $2\,m$

2. Two electric dipoles $P_1$ and $P_2$ are placed at (0, 0, 0) and (1, 0, 0) respectively, with both of them pointing in the +z direction. Without changing the orientations of the dipoles, $P_2$ is moved to (0, 2, 0). The ratio of the electrostatic potential energy of the dipoles after moving to that before moving is

(A) $\dfrac{1}{16}$

(B) $\dfrac{1}{2}$

(C) $\dfrac{1}{4}$

(D) $\dfrac{1}{8}$



ZOLLEGE.in

3. The truth table for the given circuit is

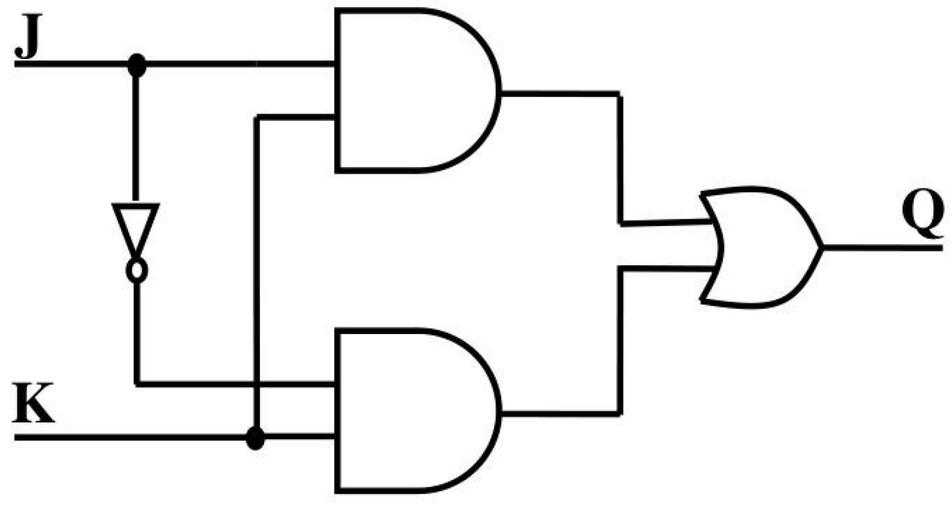


(A)

| J | K | Q |
|---|---|---|
| 0 | 0 | 1 |
| 0 | 1 | 0 |
| 1 | 0 | 1 |
| 1 | 1 | 0 |

(B)

| J | K | Q |
|---|---|---|
| 0 | 0 | 1 |
| 0 | 1 | 0 |
| 1 | 0 | 0 |
| 1 | 1 | 1 |

(C)

| J | K | Q |
|---|---|---|
| 0 | 0 | 0 |
| 0 | 1 | 1 |
| 1 | 0 | 0 |
| 1 | 1 | 1 |

(D)

| J | K | Q |
|---|---|---|
| 0 | 0 | 0 |
| 0 | 1 | 1 |
| 1 | 0 | 1 |
| 1 | 1 | 0 |

ZOLLEGE.in



ZOLLEGE.in

4. At a given point in space the total light wave is composed of three phasors $P_1 = a$, $P_2 = \frac{a}{2} e^{i\theta}$ and $P_3 = \frac{a}{2} e^{-i\theta}$. The intensity of light at this point is

(A) $4\,a^2 \cos^2\left(\frac{\theta}{2}\right)$

(B) $4\,a^2 \cos^4\left(\frac{\theta}{2}\right)$

(C) $a^2 \cos^2(\theta)$

(D) $4\,a^2 \cos^2(2\,\theta)$

5. A small magnetic dipole is kept at the origin in the *x*-*y* plane. One wire $L_1$ is located at $z = -a$ in the *x*-*z* plane with a current **I** flowing in the positive x direction. Another wire $L_2$ is at $z = +a$ in *y*-*z* plane with the same current **I** as in $L_1$, flowing in the positive y direction. The angle $\varphi$ made by the magnetic dipole with respect to the positive x-axis is

(A) 225°

(B) 120°

(C) 45°

(D) 270°

6. The ratio of the inner radii of two glass tubes of same length is $\sqrt{2}$. A fluid of viscosity $8.0\,cP$ flows through the first tube, and another fluid of viscosity $0.8\,cP$ flows through the second one when equal pressure difference is applied across both of them. The ratio of the flow rate in the first tube to that in the second tube is

(A) 1.6

(B) $10\sqrt{2}$

(C) $\sqrt{2}$

(D) 0.4

7. The relation between angular frequency $\omega$ and wave number $k$ for given type of waves is $\omega^2 = \alpha\,k + \beta\,k^3$. The wave number $k_0$ for which the phase velocity equals the group velocity is

(A) $3\sqrt{\frac{\alpha}{\beta}}$

(B) $\left(\frac{1}{3}\right)\sqrt{\frac{\alpha}{\beta}}$

(C) $\sqrt{\frac{\alpha}{\beta}}$



ZOLLEGE.in

(D) $\left(\frac{1}{2}\right)\sqrt{\frac{\alpha}{\beta}}$

8. A neutron of mass $m_n = 10^{-27}$ kg is moving inside a nucleus. Assume the nucleus to be a cubical box of size $10^{-14}$ m with impenetrable walls. Take $\hbar \approx 10^{-34}$ Js and $1\text{MeV} \approx 10^{-13}$ J. An estimate of the energy in MeV of the neutron is

(A) 80 MeV
(B) $\frac{1}{8}$ MeV
(C) 8 MeV
(D) $\frac{1}{80}$ MeV

9. A spring-mass system has undamped natural angular frequency $\omega_0 = 100$ rad s$^{-1}$. The solution *x(t)* at critical damping is given by $x(t) = x_0(1 + \omega_0 t)\exp(-\omega_0 t)$, where $x_0$ is a constant. The system experiences the maximum damping force at time

(A) 0.01 s
(B) 0.1 s
(C) $0.01\pi$ s
(D) $0.1\pi$ s

10. In an intrinsic semiconductor, the free carrier concentration $n$ (in cm$^{-3}$) varies with temperature $T$ (in Kelvin) as shown in the figure below. The band gap of the semiconductor is (use Boltzmann constant $k_B = 8.625 \times 10^{-5}$ eV K$^{-1}$)

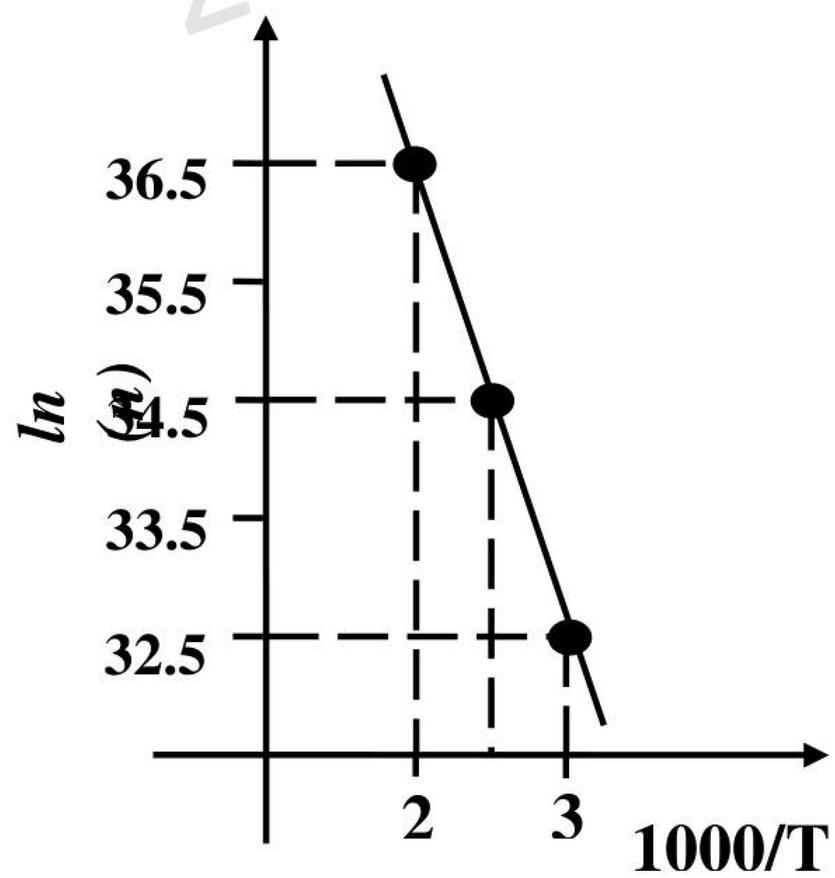


(A) 1.44 eV
(B) 0.72 eV
(C) 1.38 eV
(D) 0.69 eV



ZOLLEGE.in

11. $\vec{E}(x,y,z,t) = A(3\,\hat{i} + 4\,\hat{j})\exp[i(\omega t - k\,z)]$ represents an electromagnetic wave. Possible directions of the fast axis of a quarter wave plate which converts this wave into a circularly polarized wave are

(A) $\frac{1}{\sqrt{2}}\left[7\,\hat{i} + \hat{j}\right]$ and $\frac{1}{\sqrt{2}}\left[-\hat{i} + 7\,\hat{j}\right]$

(B) $\frac{1}{\sqrt{2}}\left[3\,\hat{i} + 4\hat{j}\right]$ and $\frac{1}{\sqrt{2}}\left[4\,\hat{i} - 3\,\hat{j}\right]$

(C) $\frac{1}{\sqrt{2}}\left[3\,\hat{i} - 4\hat{j}\right]$ and $\frac{1}{\sqrt{2}}\left[4\,\hat{i} + 3\,\hat{j}\right]$

(D) $\frac{1}{\sqrt{2}}\left[7\,\hat{i} - \hat{j}\right]$ and $\frac{1}{\sqrt{2}}\left[\hat{i} + 7\,\hat{j}\right]$

12. A particle of rest mass $m_0$ is moving uniformly in a straight line with relativistic velocity $\beta c$, where $c$ is the velocity of light in vacuum and $0 < \beta < 1$. The phase velocity of the de Broglie wave associated with the particle is

(A) $\beta\, c$

(B) $\frac{c}{\beta}$

(C) $c$

(D) $\frac{c}{\beta^2}$

ZOLLEGE.in

13. Electrons of energy $E$ coming in from $x = -\infty$ impinge upon a potential barrier of width $2a$ and height $V_0$ centered at the origin with $V_0 > E$, as shown in the figure below. Let $k = \frac{\sqrt{2m(V_0 - E)}}{\hbar}$. In the region $-a \le x \le a$, the wave function for the electrons is a linear combination of

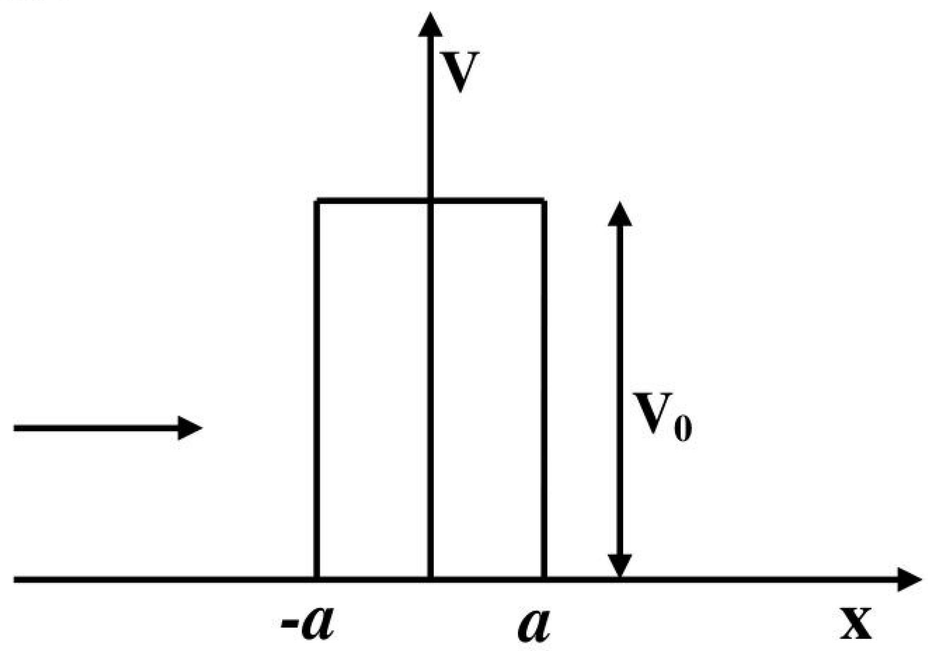




ZOLLEGE.in

(A) $e^{kx}$ and $e^{-kx}$

(B) $e^{ikx}$ and $e^{-kx}$

(C) $e^{ikx}$ and $e^{-ikx}$

(D) $e^{-ikx}$ and $e^{kx}$

14. A solid melts into a liquid via first order phase transition. The relationship between the pressure $P$ and the temperature $T$ of the phase transition is $P = -2T + P_0$, where $P_0$ is a constant. The entropy change associated with the phase transition is 1.0 J mole$^{-1}$ K$^{-1}$. The Clausius-Clapeyron equation for the latent heat is $L = T\left(\frac{dP}{dT}\right)\Delta v$. Here $\Delta v = v_{liquid} - v_{solid}$ is the change in molar volume at the phase transition. The correct statement relating the values of the volumes is

(A) $v_{liquid} = v_{solid}$

(B) $v_{liquid} = v_{solid} - 1$

(C) $v_{liquid} = v_{solid} - \frac{1}{2}$

(D) $v_{liquid} = v_{solid} + 2$

15. The symmetric part of $P = \begin{pmatrix} a \\ b \end{pmatrix} \begin{pmatrix} a-2 & b \end{pmatrix}$ is

(A) $\begin{pmatrix} a^2-2 & ba-1 \\ ba-1 & b^2-2 \end{pmatrix}$

(B) $\begin{pmatrix} a(a-2) & b \\ b & b^2 \end{pmatrix}$

(C) $\begin{pmatrix} a(a-1) & b(a-1) \\ b(a-1) & b^2 \end{pmatrix}$

(D) $\begin{pmatrix} a(a-2) & b(a-1) \\ b(a-1) & b^2 \end{pmatrix}$

16. Consider a Body Centered Cubic (BCC) crystal with lattice constant '$a$'. Determine

(a) the Miller indices for the (1, 0, 0) plane, [9]

(b) the number of atoms per unit area in the (1, 1, 1) plane. [12]

17. The equation of state of a gas is $P\left(V - \frac{a^2}{V}\right) = nRT$, while during an adiabatic process the gas obeys $PV^{\gamma} = K$, where $a$ and $K$ are positive constants. All other symbols have their usual meaning. Find the work done by the gas when it is expanded first isothermally from ($P$, $V$) to ($P_1$, $2V$) and then adiabatically from ($P_1$, $2V$) to ($\frac{P_1}{2}$, $V_1$), where $P_1 < P$.

[21]



ZOLLEGE.in

18. A conducting sphere of radius $R_A$ has a charge $Q$. It is surrounded by a dielectric spherical shell of inner radius $R_A$ and outer radius $R_B$ (as shown in the figure below) having electrical permittivity $\varepsilon(r) = \varepsilon_0\ r$ .

(a) Find the surface bound charge density at r = $R_A$. [12]

(b) Find the total electrostatic energy stored in the dielectric (region B). [9]

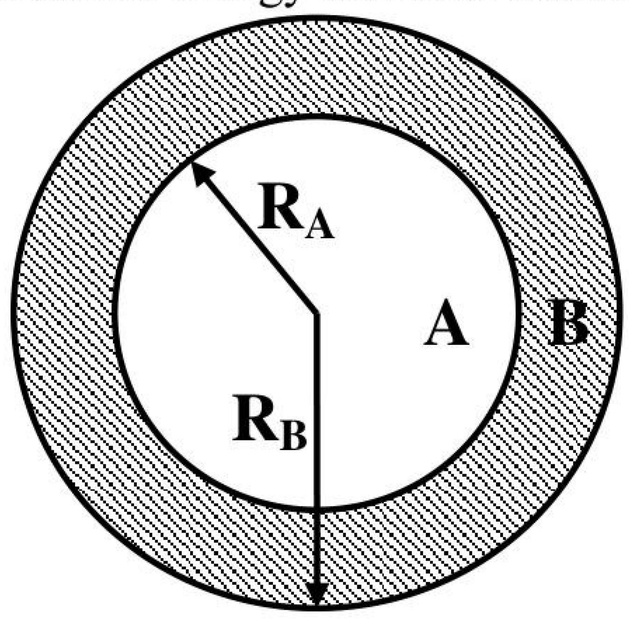


19. For the transistor circuit shown below, evaluate $V_E$, $R_B$ and $R_C$, given $I_C$ = 1 mA, $V_{CE}$ = 3.8 V, $V_{BE}$ = 0.7 V and $V_{CC}$ = 10 V. Use the approximation $I_C \approx I_E$.

[21]

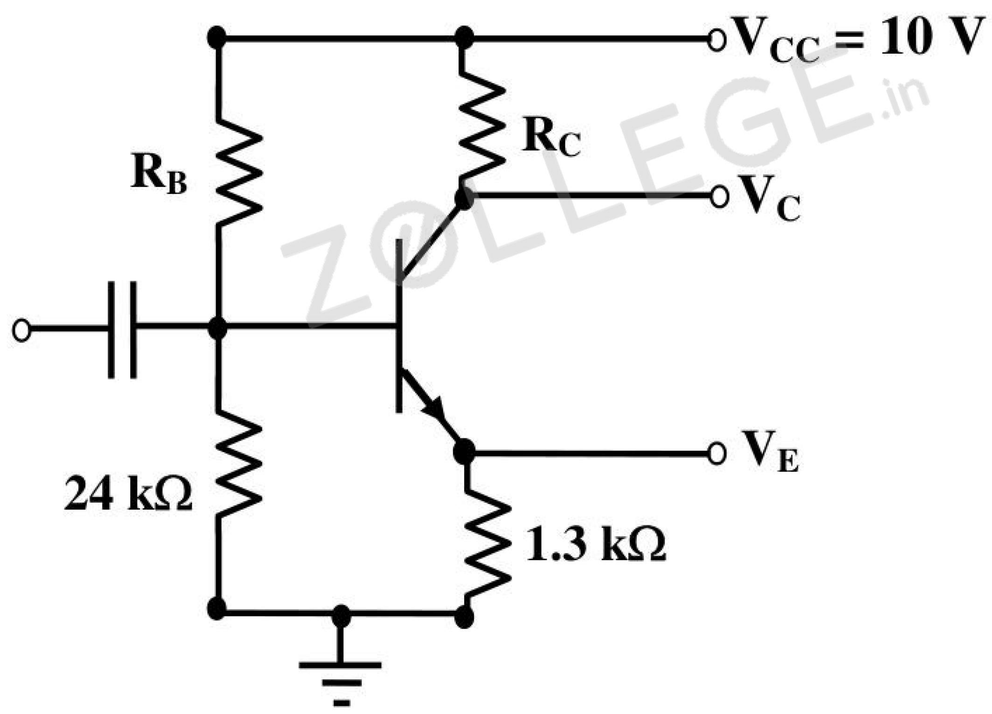


20. For the vector field $\vec{V} = x z^2 \hat{i} - y z^2 \hat{j} + z\left(x^2 - y^2\right)\hat{k}$ ,

(a) calculate the volume integral of the divergence of $\vec{V}$ over the region defined by $-a \le x \le a$, $-b \le y \le b$ and $0 \le z \le c$.

[12]

(b) Calculate the flux of $\vec{V}$ out of the region through the surface at $z = c$. Hence deduce the net flux through the rest of the boundary of the region. [9]

21. The spherical surface of a plano-convex lens of radius of curvature R = 1m is gently placed on a flat plate. The space between them is filled with a transparent liquid of refractive index 1.55. The refractive indices of the lens and the flat plate are 1.5 and 1.6



ZOLLEGE.in

respectively. The radius of the sixteenth dark Newton's ring in the reflected light of wavelength λ is found to be $\sqrt{5}$ mm.

(a) Determine the wavelength λ (in microns) of the light. [12]

(b) Now the transparent liquid is completely removed from the space between the lens and the flat plate. Find the radius (in mm) of the twentieth dark ring in the reflected light after this change. [9]

22. A resistor of 1 kΩ and an inductor of 5 mH are connected in series with a battery of emf 4 V through a switch. The switch is closed at time t = 0. In the following, you may use $e^3 \approx 20$.

(a) Find the current flowing in the circuit at t = 15 micro-second. [9]

(b) Find the heat dissipated through the resistor during the first 15 micro-second. [12]

23. A photon of energy $E_{ph}$ collides with an electron at rest and gets scattered at an angle $60^\circ$ with respect to the direction of the incident photon. The ratio of the relativistic kinetic energy T of the recoiled electron and the incident photon energy $E_{ph}$ is 0.05.

(a) Determine the wavelength of the incident photon in terms of the Compton wavelength $\lambda_c\left(=\dfrac{h}{m_e c}\right)$, where $h$, $m_e$, $c$ are Planck's constant, electron rest mass and velocity of light respectively. [12]

(b) What is the total energy $E_e$ of the recoiled electron in units of its rest mass ? [9]

24. A particle moves in a plane with velocity $\vec{v} = v_r\,\hat{r} + v_\theta\,\hat{\theta}$ such that $v_r = \dfrac{3}{4}v_\theta$. The time dependence of the magnitude of the velocity $|\vec{v}| = 5t$. It is given that $r = 1$, $\theta = 0$ and $v_r > 0$ at $t = 0$. (In the following, you may use $e^3 \approx 20$.)

(a) Determine the trajectory $r(\theta)$ of the particle. [9]

(b) At what time will $\theta$ become 4 radian? [12]

25. A body of mass 1 kg moves under the influence of a central force, with a potential energy function $V(r) = -\dfrac{\exp(-3r/2)}{5r^2}$ Joule, where $r$ is in meters. It is found to move in a circular orbit of radius $r = 2$ m. (In the following, you may use $e^3 \approx 20$).

(a) Find its angular momentum L and total energy E. [12]

(b) A piece of mass $m_1 = 0.5$ kg breaks off suddenly from the body and begins to fall radially inwards with velocity v = 10 cm $s^{-1}$. What are the values of angular momentum $L_2$ and total energy $E_2$ of the remaining piece, assuming that the potential energy function remains the same? [9]



ZOLLEGE.in