SECTION – A (75 marks)

1. This question consists of TWENTY-FIVE sub-questions (1.1 – 1.25) of ONE mark each. For each of these sub-questions, four possible alternatives (A,B, C and D) are given, out of which ONLY ONE is correct. Indicate the correct answers in the boxes corresponding to the questions only on the FIRST sheet of the answer book.

1.1 In the circuit of Fig.P.11, the voltage v(t) is

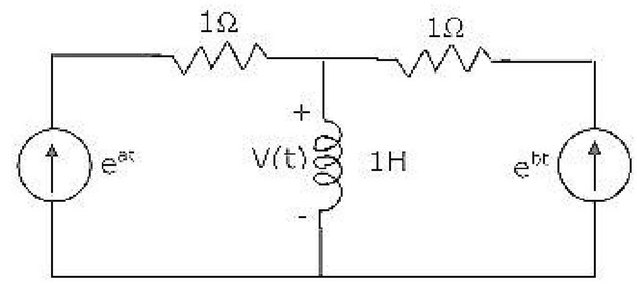

(a) $e^{at} - e^{bt}$ (b) $e^{at} + e^{bt}$

(c) $ae^{at} - be^{bt}$ (d) $ae^{at} + be^{bt}$

1.2 In the circuit of Fig.P1.2, the value of the voltage source E is

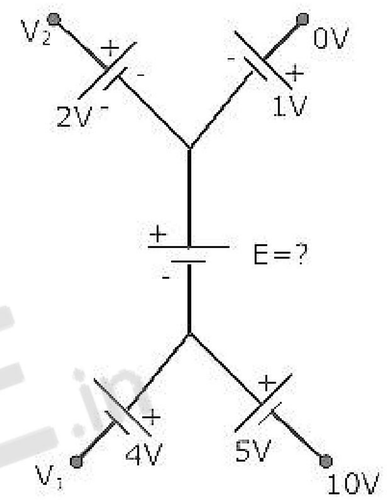

(a) -16 V

(b) 4 V

(c) -6V

(d) 16 V

1.3 Given that $L = [f(t)] = \frac{s+2}{s^2+1}, L[f(t)] = \frac{s^2+1}{(s+3)(s+2)}, h(t) = \int_0^t f(\tau)g(t-\tau)d\tau.$

$L[h(t)]$ is

(a) $\frac{s^2+1}{s+3}$ (b) $\frac{1}{s+3}$

(c) $\frac{s^2+1}{(s+3)(s+2)} + \frac{s+2}{s^2+1}$ (d) None of the above

1.4 In the differential amplifier of Fig.P1.4, if the source resistance of the current source I_{EE} is infinite, then the common-mode gain is

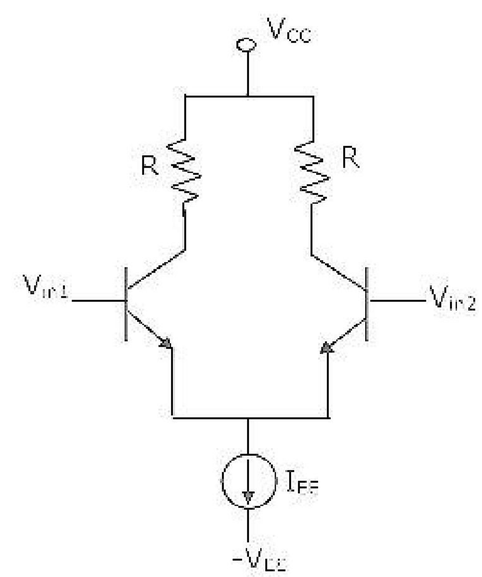

(a) zero

(b) infinite

(c) indeterminate

(d) $\frac{V_{in1} + V_{in2}}{2V_T}$

ZOLLEGE.in

1.5 In the circuit of Fig.P.15, V_o is

(a) -1 V

(b) 2 V

(c) +1 V

(d) +15 V

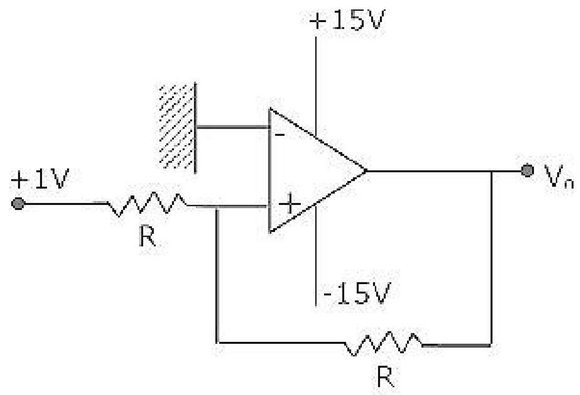

1.6 Introducing a resistor in the emitter of a common amplifier stabilizes the dc operating point against variations in

(a) only the temperature

(b) only the β of the transistor

(c) both temperature and β

(d) none of the above

1.7 The current gain of a bipolar transistor drops at high frequencies because of

(a) transistor capacitances

(b) high current effects in the base

(c) parasitic inductive elements

(d) the Early effect

1.8 An amplifier with resistive negative feedback has two left half-plane poles in its open-loop transfer function. The amplifier

(a) will always be unstable at high frequencies

(b) will be stable for all frequencies

(c) may be unstable, depending on the feedback factor

(d) will oscillate at low frequencies

1.9 If the op-amp in Fig.P.1.9, is ideal, then v_o, is

(a) zero

(b) $(V_1 - V_2)\sin\omega t$

(c) $-(V_1 + V_2)\sin\omega t$

(d) $(V_1 + V_2)\sin\omega t$

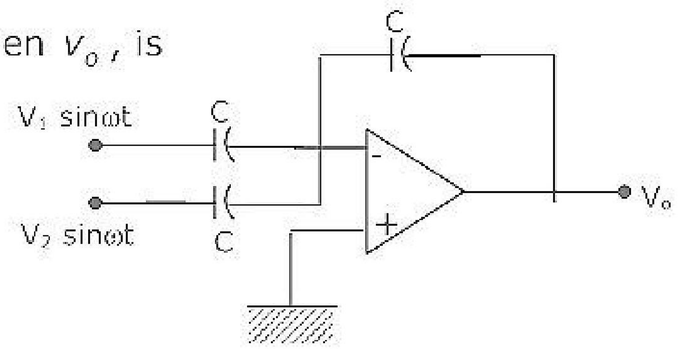

1.10 The configuration of Fig.P.1.10 is a

(a) precision integrator

(b) Hartley oscillator

(c) Butterworth highpass filter

(d) Wien-bridge oscillator

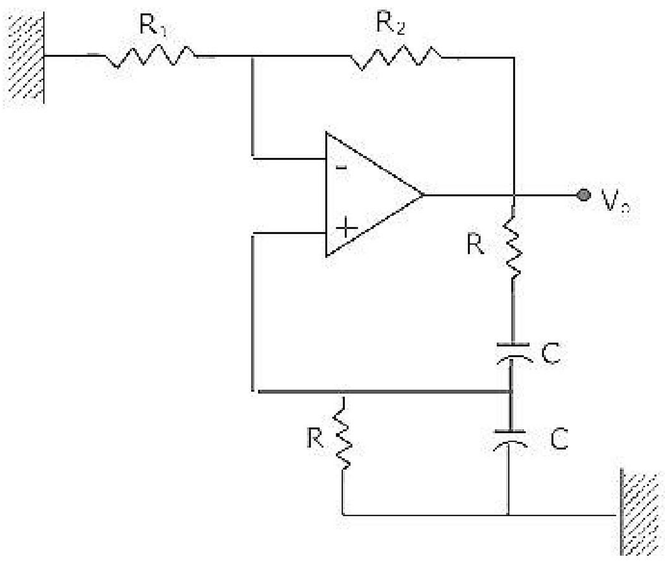

ZOLLEGE.in

1.11 Assume that the op-amp of Fig.P1.11 is ideal. If v_i is a triangular wave, then v_o will be

(a) square wave
(b) triangular wave
(c) parabolic wave
(d) sine wave

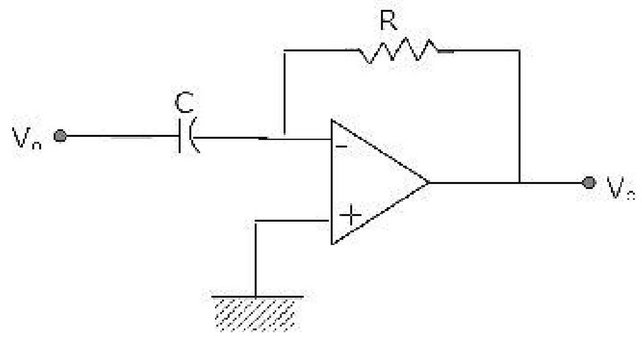

1.12 The Fourier Transform of the signal $x(t) = e^{3t^2}$ is of the following form, where A and B are constants:

(a) $Ae^{-B|f|}$ (b) Ae^{-Bf} (c) $A + B|f|^2$ (d) Ae^{-Bf}

1.13 A system with an input $x(t)$ and output $y(t)$ is described by the relation: $y(t) = tx(t)$. This system is

(a) linear and time-invariant
(b) linear and time varying
(c) non-linear and time-invariant
(d) non-linear and time-varying

1.14 The amplitude modulated wave from $s(t) = A_c[1 + K_a m(t)]\cos\omega_c t$ is fed to an ideal envelope detector. The maximum magnitude of $K_0 m(t)$ is greater than 1. Which of the following could be the detector output?

(a) $A_c m(t)$
(b) $A_c^2[1 + K_a m(t)]^2$
(c) $|A_c[1 + K_a m(t)]|$
(d) $A_c[1 + K_a m(t)]^2$

1.15 An 8 bit successive approximation analog to digital converter has full scale reading of 2.55 V and its conversion time for an analog input of 1V is 20μs. The conversion for a 2V input will be

(a) 10 μs (b) 20 μs (c) 40 μs (d) 50 μs

1.16 The number of hardware interrupts (which require an external signal to interrupt) present in an 8085 microprocessor are

(a) 1 (b) 4 (c) 5 (d) 13

1.17 The most commonly used amplifier in sample and hold circuits is

(a) a unity gain inverting amplifier
(b) a unity gain non-inverting amplifier
(c) an inverting amplifier with a gain of 10
(d) an inverting amplifier with a gain of 100

ZOLLEGE.in

1.18 The number of comparators in a 4 bit flash ADC is

(a) 4 (b) 5 (c) 15 (d) 16

1.19. For the logic circuit shown in Fig.P1.19, the required input condition (A,B,C) to make the output (X)=1 is

(a) 1, 0, 1

(b) 0, 0, 1

(c) 1, 1, 1

(d) 0, 1, 1

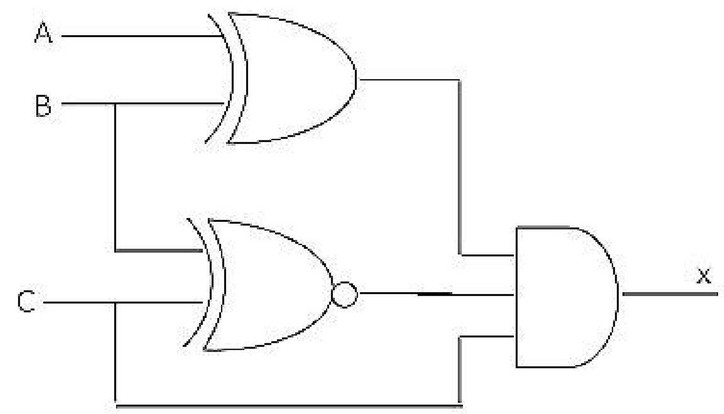

1.20. In the 8085 microprocessor, the RST6 instruction transfers the program execution to the following location

(a) 30 H (b) 24 H (c) 48 H (d) 60 H

1.21. The magnitudes of the open-circuit and short-circuit input impedances of a transmission line are 100Ω and 25Ω respectively. The characteristic impedance of the line is,

(a) 25Ω (b) 50Ω (c) 75Ω (d) 100Ω

1.22. A TEM wave is incident normally upon a perfect conductor. The E and H fields at the boundary will be, respectively.

(a) minimum and minimum (b) maximum and maximum

(c) minimum and maximum (d) maximum and minimum

1.23. The frequency range for satellite communication is

(a) 1 KHz to 100 KHz (b) 100 KHz to 10 KHz

(c) 10 MHz to 30 MHz (d) 1 GHz to 30 GHz

1.24. If the diameter of a $\frac{\lambda}{2}$ dipole antenna is increased from $\frac{\lambda}{100}$ to $\frac{\lambda}{50}$, then its

(a) bandwidth increases (b) bandwidth decreases

(c) gain increases (d) gain decreases

1.25 The circuit of Fig.P1.25 represents a

(a) low pass filter

(b) high pass filter

(c) band pass filter

(d) band reject filter

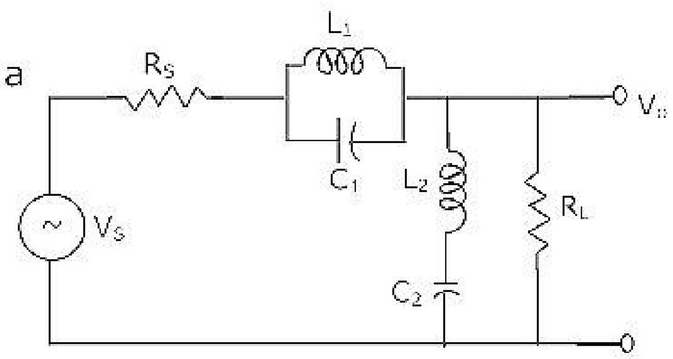

ZOLLEGE.in

2. This question consists of TWENTY-FIVE sub-questions (2.1 – 2.25) of ONE mark each. For each of these sub-questions, four possible alternatives (A,B, C and D) are given, out of which ONLY ONE is correct. Indicate the correct answers in the boxes corresponding to the questions only on the SECOND sheet of the answer book.

2.1 The eigen values of the matrix $\begin{bmatrix} 2 & -1 & 0 & 0 \\ 0 & 3 & 0 & 0 \\ 0 & 0 & -2 & 0 \\ 0 & 0 & -1 & 4 \end{bmatrix}$ are

(a) 2, -2, 1, -1
(b) 2, 3, -2, 4
(c) 2, 3, 1, 4
(d) None of the above

2.2. Use the data of Fig.2(a). The current i in the circuit of Fig.(b) is

(a) -2A
(b) 2A
(c) -4A
(d) +4A

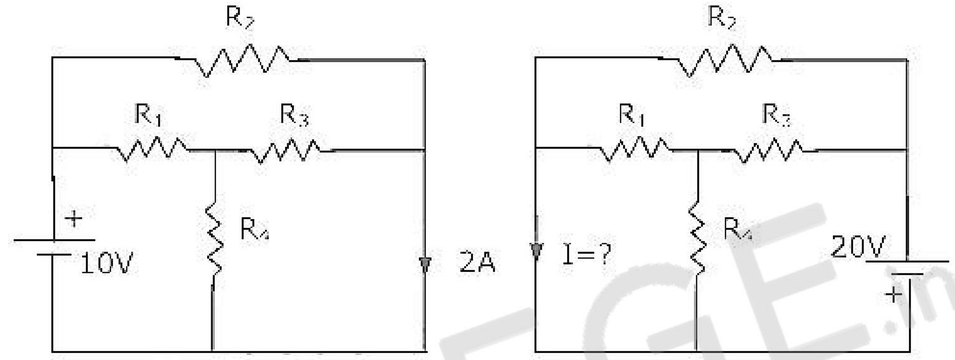

2.3. For the circuit in Fig.P2.3, the voltage v_o is

(a) 2V
(b) 1V
(c) -1V
(d) None of the above

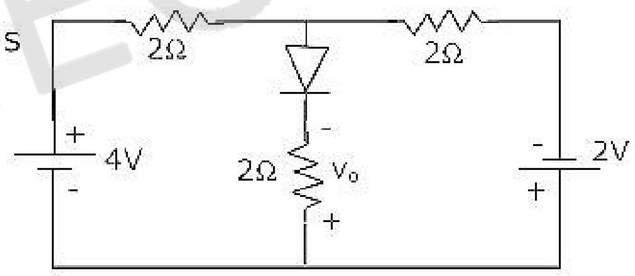

2.4. A linear time invariant system has an impulse response $e^{2t}, t > 0$. If the initial conditions are zero and the input is e^{3t}, the output for t > 0 is

(a) $e^{3t} - e^{2t}$
(b) e^{5t}
(c) $e^{3t} + e^{2t}$
(d) None of the above

2.5. In the circuit of Fig.P2.5, assume that the transistor is in active region. It has a large β and its base-emitter voltage is 0.7V. The value of I_c is

(a) Indeterminate since R_c is not given
(b) 1 mA
(c) 5 mA
(d) 10 mA

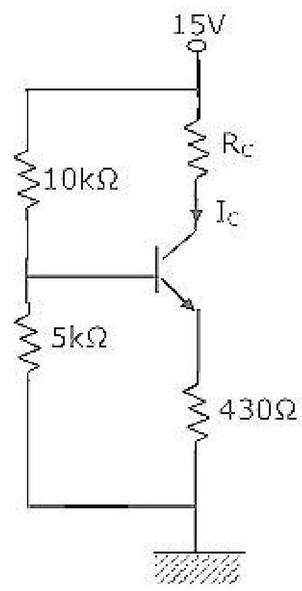

ZOLLEGE.in

2.6. If the op-amp in Fig.P2.6, has an input offset voltage of 5 mV and an open-loop voltage gain of 10,000, then v_o will be

(a) 0V

(b) 5 mV

(c) +15 V or −15 V

(d) +50 V or −50 V

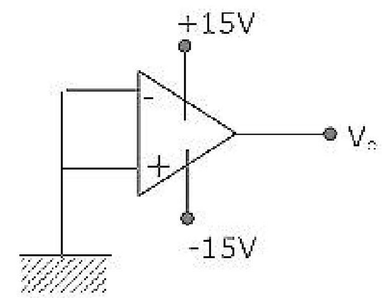

2.7. For the logic circuit shown in Fig.P2.7, the simplified Boolean expression for the output Y is

(a) A+B+C

(b) A

(c) B

(d) C

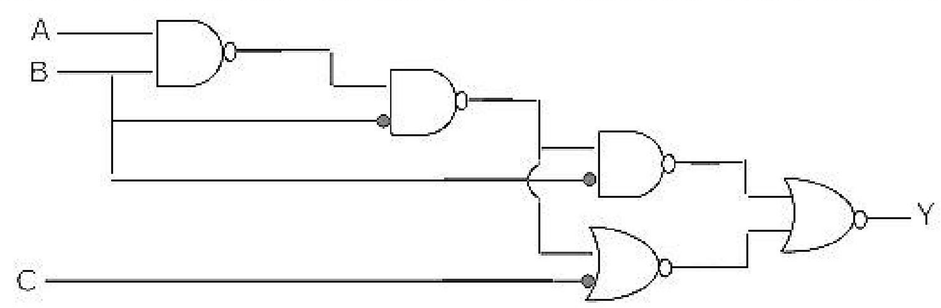

2.8. For the 4 bit DAC shown in Fig.P2.8, the output voltage v_o is

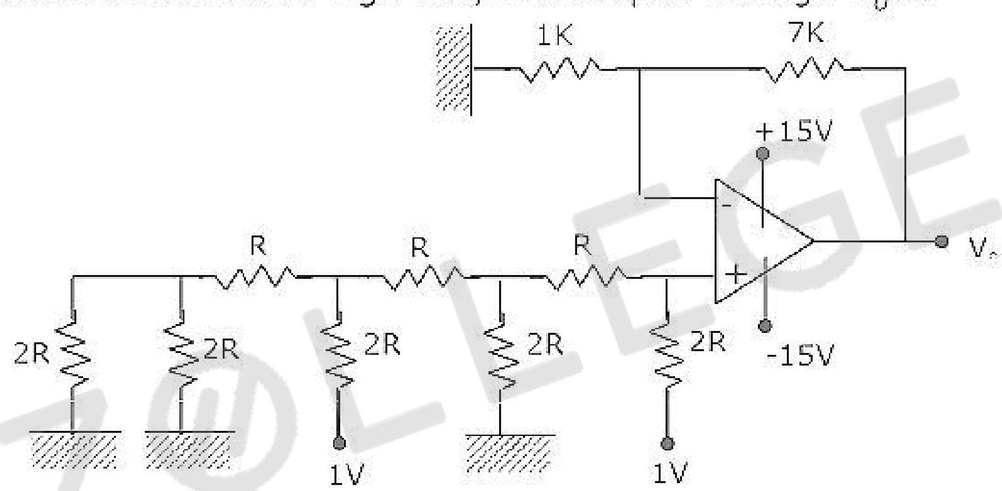

(a) 10 V (b) 5 V (c) 4 V (d) 8 V

2.9. A sequential circuit using D flip-flop and logic gates is shown in Fig.P2.9, where X and Y are the inputs and Z is the output. The circuit is

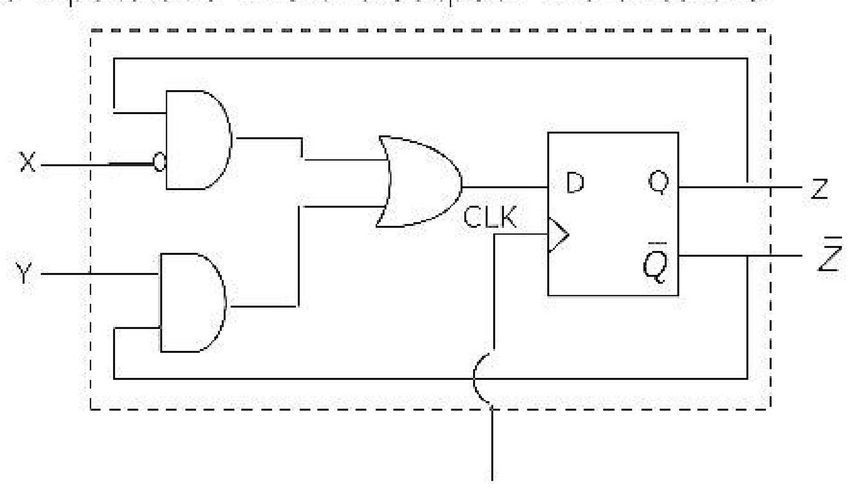

(a) S – R Flip-Flop with inputs X = R and Y = S

(b) S – R Flip-Flop with inputs X = S and Y = R

(c) J – K Flip-Flop with inputs X = J and Y = K

(d) J – K Flip-Flop with inputs X = K and Y = J

ZOLLEGE.in

2.10. The contents of Register (B) and Accumulator (A) of 8085 microprocessor are 49H and 3AH respectively. The contents of A and the status of carry flag (CY) and sign flag (S) after executing SUB B instructions are

(a) A = F1, CY = 1, S =1 (b) A = 0F, CY = 1, S =1

(c) A = F0, CY = 0, S =0 (d) A = 1F, CY = 1, S =1

2.11. In Fig.P2.11, the J and K inputs of all the four Flip-Flops are made high. The frequency of the signal at output Y is

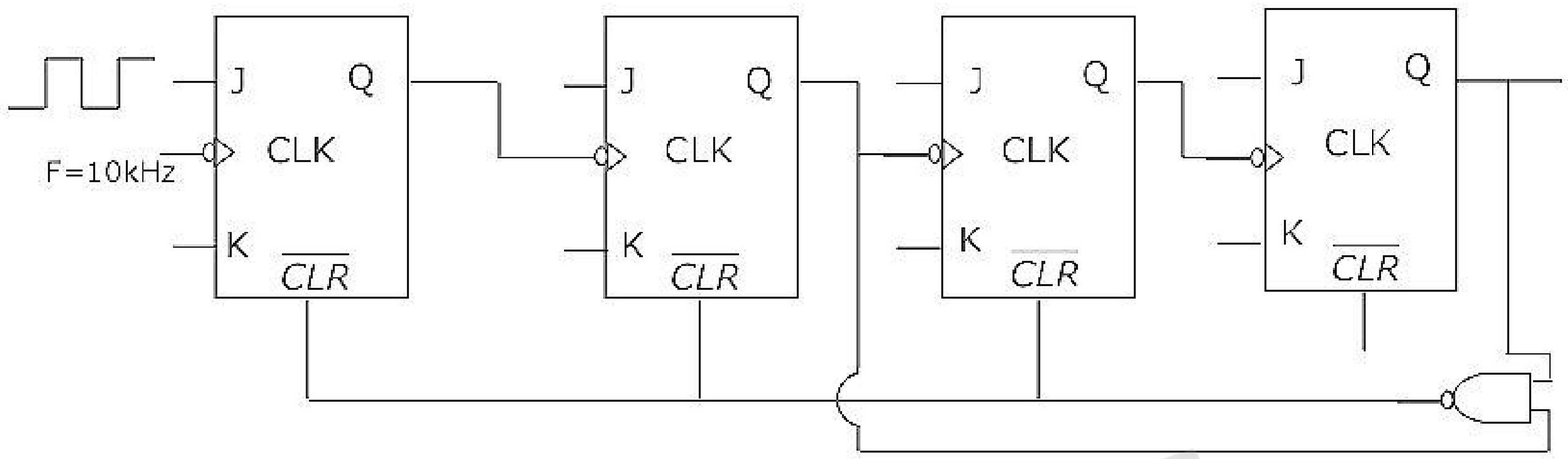

(a) 0.833 KHz (b) 1.0 KHz (c) 0.91 KHz (d) 0.77 KHz

2.12. One period (0,T) each of two periodic waveforms, W_1 and W_2 are shown in Fig.P2.12. The magnitudes of the nth Fourier series coefficients of W_1 and W_2, for $n \geq 1$, n odd, are respectively proportional to

(a) $|n^{-3}|$ and $|n^{-2}|$

(b) $|n^{-2}|$ and $|n^{-3}|$

(c) $|n^{-1}|$ and $|n^{-2}|$

(d) $|n^{-4}|$ and $|n^{-2}|$

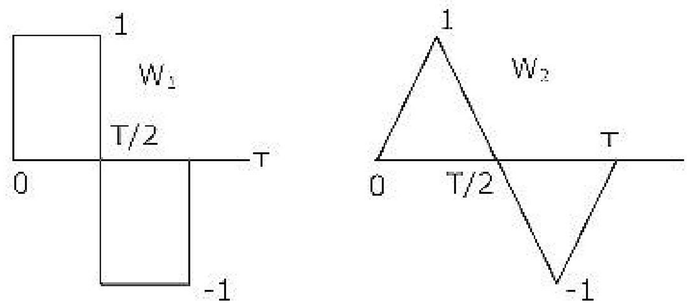

2.13. Let u(t) be the step function. Which of the waveforms in Fig.P2.13(a) – (d) corresponds to the convolution of u(t) – u(t – 1) with u(t) – u(t – 2)?

(a)

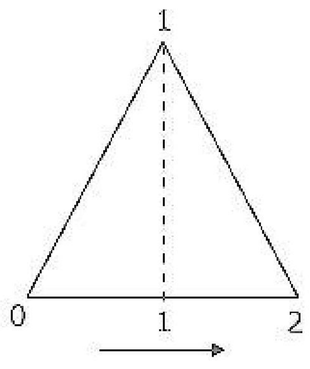

(b)

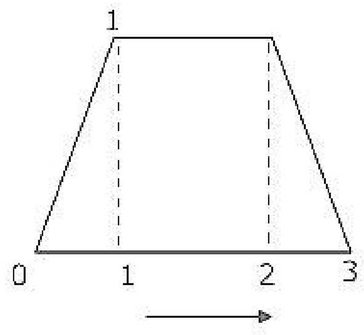

ZOLLEGE.in

(c)

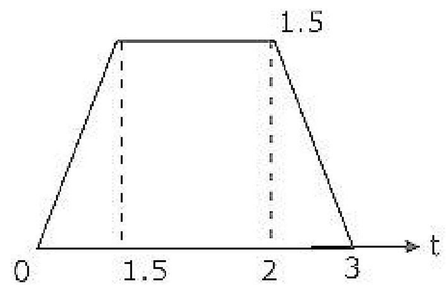

(d)

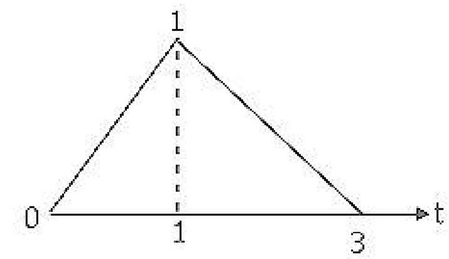

2.14. In Fig.P2.14, the steady state output voltage corresponding to the input voltage 3 + 4 sin 100t V is

(a) $3+\frac{4}{\sqrt{2}}\sin\left(100t-\frac{\pi}{4}\right)V$

(b) $3+4\sqrt{2}\sin\left(100t-\frac{\pi}{4}\right)V$

(c) $\frac{3}{2}+\frac{4}{\sqrt{2}}\sin\left(100t+\frac{\pi}{4}\right)V$

(d) $3+4\sin\left(100t+\frac{\pi}{4}\right)V$

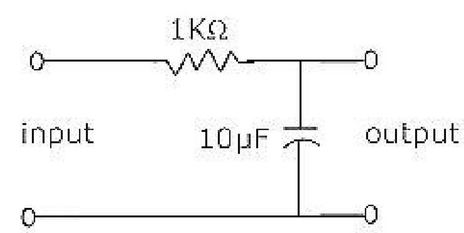

2.15. In a digital communication system employing Frequency Shift Keying (FSK), the 0 and 1 bit are represented by sine waves of 10 KHz and 25 KHz respectively. These waveforms will be orthogonal for a bit interval of

(a) 45 μsec (b) 200 μsec (c) 50 μsec (d) 250 μsec

2.16. A message m(t) band-limited to the frequency f_m has a power of P_m. The power of the output signal in the Fig.P2.16 is

(a) $\frac{P_m\cos\theta}{2}$

(b) $\frac{P_m}{4}$

(c) $\frac{P_m\sin^2\theta}{4}$

(d) $\frac{P_m\cos^2\theta}{4}$

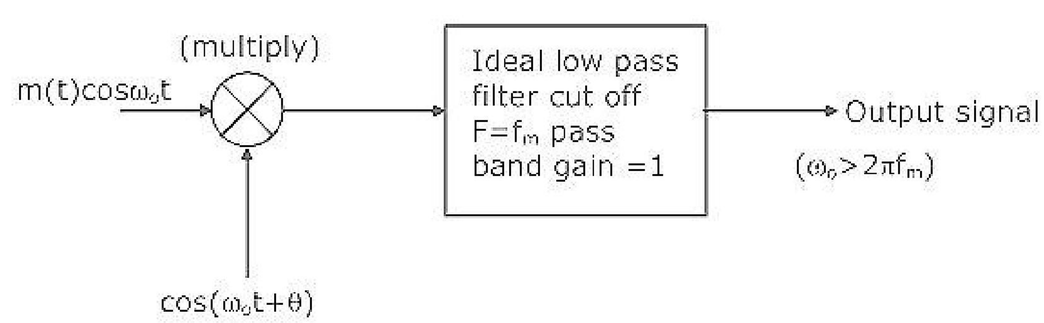

2.17. The Hilbert transform of $\cos\omega_1 t+\sin\omega_2 t$ is

(a) $\sin\omega_1 t-\cos\omega_2 t$ (b) $\sin\omega_1 t+\cos\omega_2 t$

(c) $\cos\omega_1 t-\sin\omega_2 t$ (d) $\sin\omega_1 t+\sin\omega_2 t$

ZOLLEGE.in

2.18. A system has a phase response given by $\phi(\omega)$, where ω is the angular frequency. The phase delay and group delay at $\omega = \omega_0$ are respectively given by

(a) $-\frac{\phi(\omega_0)}{\omega_0}, -\frac{d\phi(\omega)}{d\omega}\Big|_{\omega=\omega_0}$

(b) $\phi(\omega_0), -\frac{d^2\phi(\omega_0)}{d\omega^2}\Big|_{\omega=\omega_0}$

(c) $\frac{\omega_0}{\phi(\omega_0)}, -\frac{d\phi(\omega)}{d\omega}\Big|_{\omega=\omega_0}$

(d) $\omega_0\phi(\omega_0), \int_{-\infty}^{\omega_0}\phi(\lambda)\,d\lambda$

2.19. A system described by the transfer function

$H(s) = \frac{1}{s^3 + \alpha s^2 + ks + 3}$ is stable. The constraints on α and k are.

(a) $\alpha > 0, \alpha k < 3$ (b) $\alpha > 0, \alpha k > 3$ (c) $\alpha > 0, \alpha k > 0$ (d) $\alpha > 0, \alpha k < 0$

2.20. In an FM system, a carrier of 100 MHz is modulated by a sinusoidal signal of 5 KHz. The bandwidth by Carson's approximation is 1 MHz. If y(t) = (modulated waveform)^3, than by using Carson's approximation, the bandwidth of y(t) around 300 MHz and the and the spacing of spectral components are, respectively.

(a) 3 MHz, 5 KHz (b) 1 MHz, 15 KHz

(c) 3 MHz, 15 KHz (d) 1 MHz, 5 KHz

2.21. A uniform plane wave in air impinges at 45° angle on a lossless dielectric material with dielectric constant ε_r. The transmitted wave propagates in a 30° direction with respect to the normal. The value of ε_r is

(a) 1.5 (b) $\sqrt{1.5}$ (c) 2 (d) $\sqrt{2}$

2.22. For an 8 feet (2.4 m) parabolic disk antenna operating at 4 GHz, the minimum distance required for far field measurement is closest to

(a) 7.5 cm (b) 15 cm (c) 15 m (d) 150 m

2.23. A rectangular wave guide has dimensions 1 cm × 0.5 cm. Its cut-off frequency is

(a) 2 dB (b) 5 dB (c) 8 dB (d) 12 dB

2.24. A rectangular wave guide has dimensions 1 cm × 0.5 cm. Its cut-off frequency is

(a) 5 GHz (b) 10 GHz (c) 15 GHz (d) 20 GHz

2.25. Two coaxial cables 1 and 2 are filled with different dielectric constants ε_{r1} and ε_{r2} respectively. The ratio of the wavelengths in the two cables, $\left(\frac{\lambda_1}{\lambda_2}\right)$ is

(a) $\sqrt{\frac{\varepsilon_{r1}}{\varepsilon_{r2}}}$ (b) $\sqrt{\frac{\varepsilon_{r2}}{\varepsilon_{r1}}}$ (c) $\frac{\varepsilon_{r1}}{\varepsilon_{r2}}$ (d) $\frac{\varepsilon_{r2}}{\varepsilon_{r1}}$

ZOLLEGE.in

SECTION – B (75 marks)

This section consists of TWENTY questions of FIVE marks each. Attempt ANY FIFTEEN questions out of them. If more number of questions are attempted, score off the answers not be evaluated, else only the first fifteen unscored answers will be considered.

3. For the circuit in Fig.P3

   (a) Find the Thevenin equivalent of the sub circuit faced by the capacitor across the terminals a, b.

   (b) Find $v_c(t), t > 0$, given $v_c(0) = 0$

   (c) Find $i(t), t > 0$

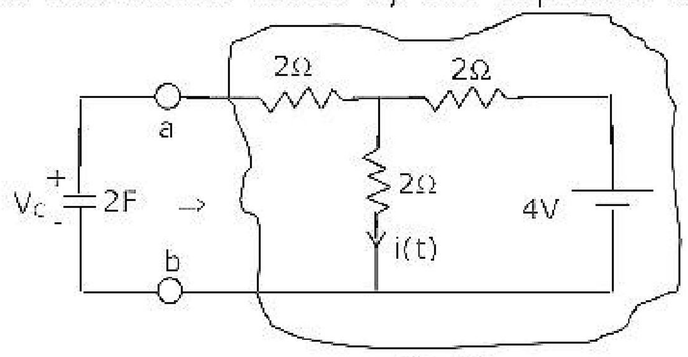

Fig.P3

4. For the circuit in Fig.P4, which is in steady state

   (a) Find the frequency ω_o at which the magnitude of the impedance across terminals a, b reaches a maximum.

   (b) Find the impedance across a, b at the frequency ω_o

   (c) If $v_s(t) = V\sin(\omega_o t)$, find $i_L(t), i_R(t)$.

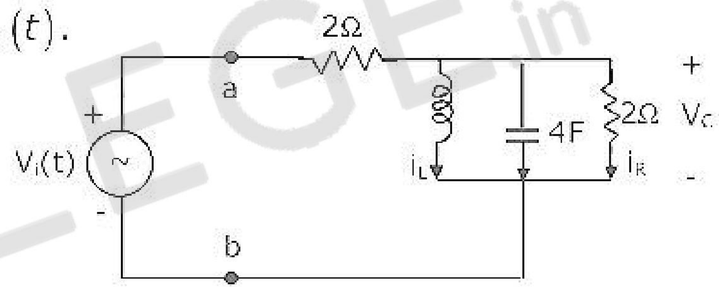

5. For the circuit in Fig.P5, write the state equations using v_c and i_L as state variables.

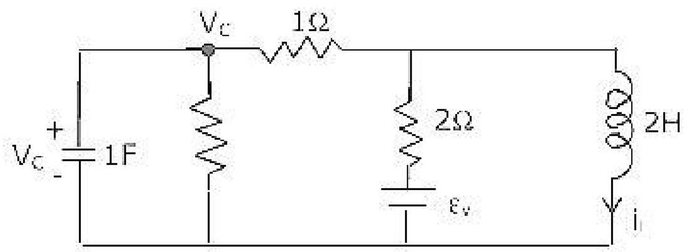

6. The network N in Fig.P6 consists only of two elements: a resistor of 1Ω and an inductor of L Henry. A 5 V source is connected at the input at t = 0 seconds. The inductor current is zero at t =0. The output voltage is found to be $5e^{-3t}V$, for

   (a) Find the voltage transfer function of the network.

   (b) Find L, and draw the configuration of the network.

   (c) Find the impulse response of the network.

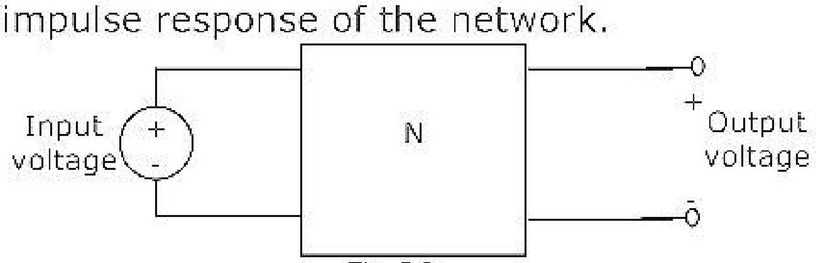

Fig.P6

ZOLLEGE.in

7. For the linear, time invariant system whose block diagram is shown in Fig.P7(a), with input x(t) and output y(t),

(a) Find the transfer function.

(b) For the step response of the system [i.e. find y(t) when x(t) is a unit step function and the initial conditions are zero]

(c) Find y(t), if x(t) is as shown in Fig.P7(b), and the initial conditions are zero.

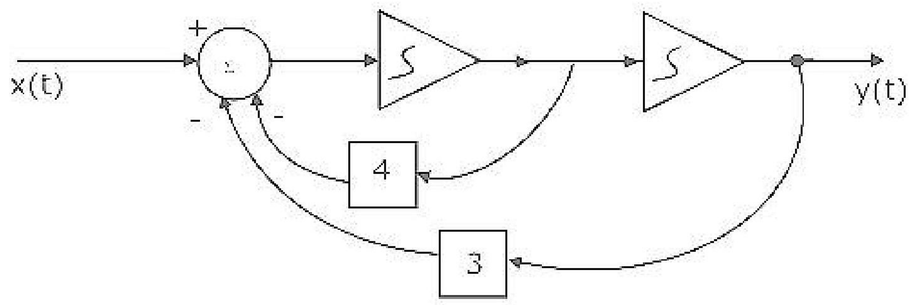

Fig.P7(a)

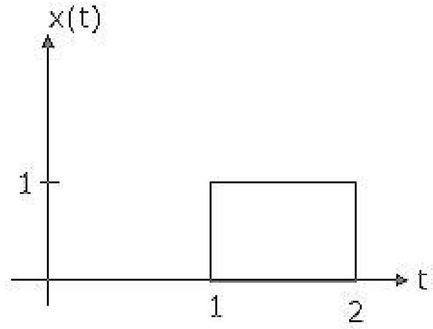

Fig.P7(b)

8. A certain linear, time-invariant system has the state and output representation shown below:

$$\begin{pmatrix} \dot{x}_1 \\ \dot{x}_2 \end{pmatrix} = \begin{pmatrix} -2 & 1 \\ 0 & -3 \end{pmatrix} \begin{pmatrix} x_1 \\ x_2 \end{pmatrix} + \begin{pmatrix} 1 \\ 0 \end{pmatrix} u$$

$$y = \begin{pmatrix} 1 & 1 \end{pmatrix} \begin{pmatrix} x_1 \\ x_2 \end{pmatrix}$$

(a) Find the eigen values (natural frequencies) of the system.

(b) If u(t) = δ(t) and $x_1(0_-) = x_2(0_+) = 0$, find $x_1(t), x_2(t)$ and $y(t)$, for t > 0.

(c) When the input is zero, choose initial conditions

$x_1(0_+)$ and $x_2(0_+)$ such that $y(t) = Ae^{2t}$ for $t > 0$.

9. The block diagram of a feedback system is shown in Fig.P9(a).

(a) Find the closed loop transfer function.

(b) Find the minimum value of G for which the step response of the system would exhibit an overshoot, as shown in Fig.P9(b).

(c) For G equal to twice this minimum value, find the time period T indicated in Fig.P9(b).

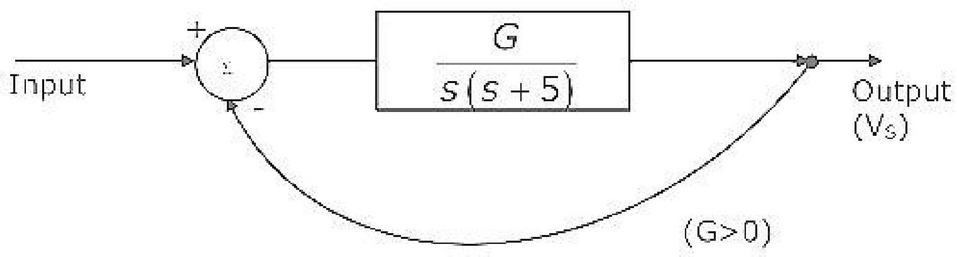

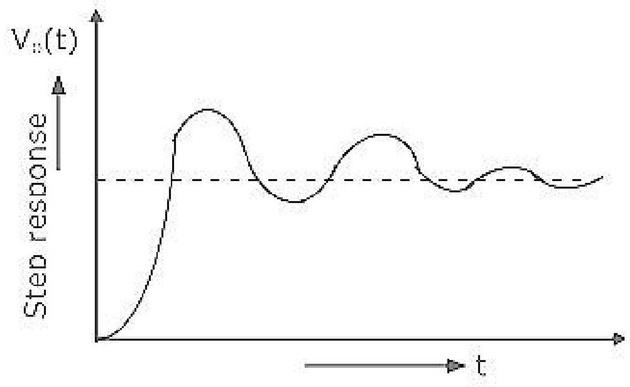

ZOLLEGE.in

10. (a) For Fig.P10(a), Plot v_o under steady state conditions, with and without C. Assume that the diode is ideal.

(b) Design a circuit using two ideal diodes, one resistor and two voltage sources that would convert the input voltage of Fig.P10(b) to the output voltage of Fig.P10(c). The resistor value need not be specified.

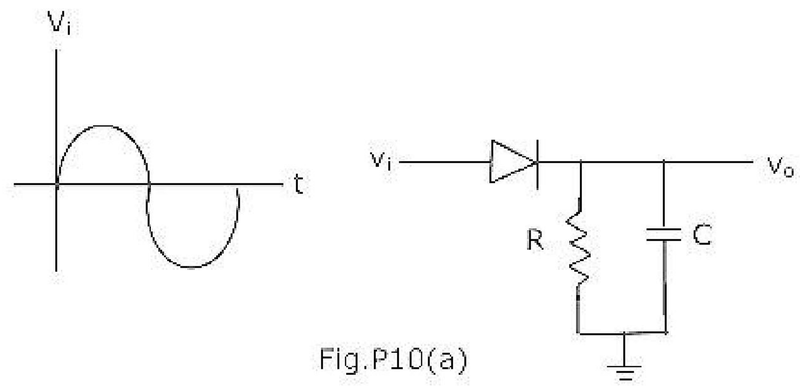

Fig.P10(a)

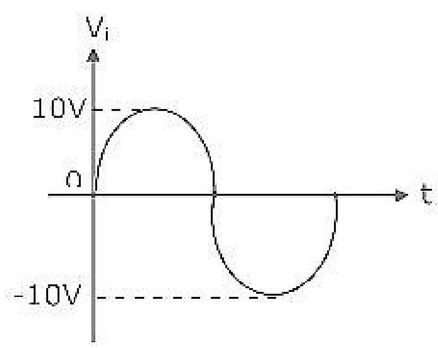

Fig.P10(b)

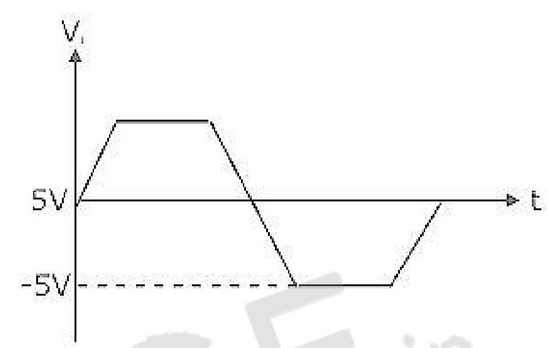

Fig.P10(c)

11. For the amplifier of Fig.P11,

$I_C = 1.3mA, R_C = 2k\Omega, R_E = 500\Omega, V_T = \frac{T}{q} = 26mV, \beta = 100, V_{CC} = 15V$

$v_s = 0.01\sin(\omega t)V$ and $C_b = C_e = 10\mu F$.

(a) What is the small-signal voltage gain, $A_v = \frac{v_o}{v_s}$?

(b) What is the approximate A_v if C_e is removed?

(c) What will v_o be if C_b is short-circuited?

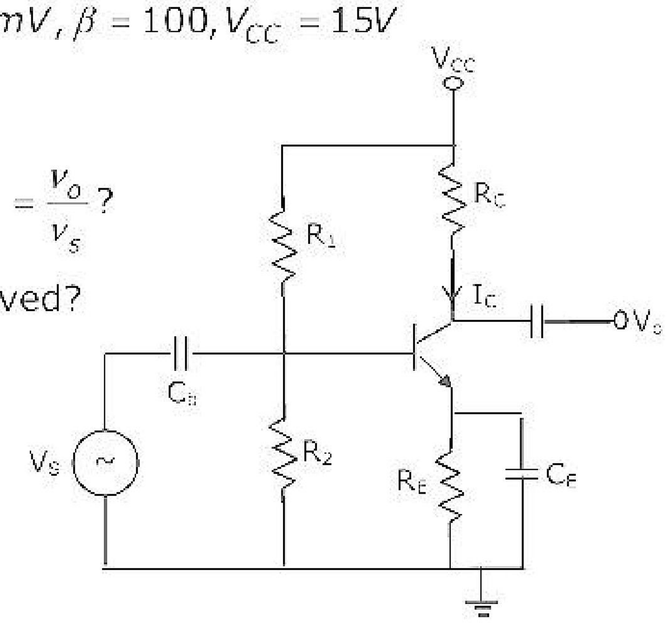

12. For a feedback amplifier, the open loop transfer function has three poles at 100k rad/s, 1 M rad/s and 10 M rad/s. The low frequency open loop gain is 1000 and the feedback factor (β) is 1. Use Bode plots to determine the phase margin of the amplifier. Is the amplifier stable?

ZOLLEGE.in

13. Fig.P13 shows a common base amplifier.

(a) Write expressions for the time-constants associated with the capacitors, C_B and C_S.

(b) What is the approximate lower cutoff frequency of the amplifier?

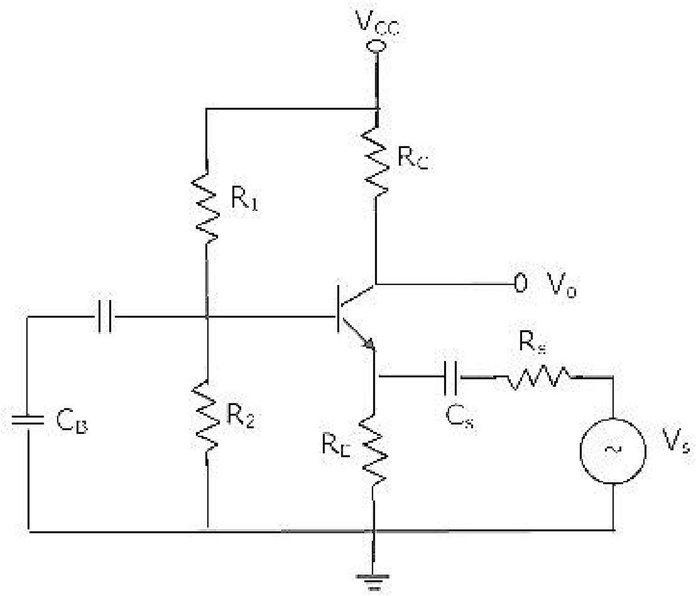

14. For the CMOS monostable multi-vibrator of Fig.P14, R = 50 kW, C = 0.01μF, $V_{DD} = 5V$, and the CMOS NOR gates have a threshold voltage (V_T) of 1.5 V. v_{in} is a trigger pulse $(\tau_p \quad RC)$ as shown in the figure.

(a) Plot v_{01} and v_R as functions of time.

(b) Write the equation for $v_R(t)$, for t > 0.

(c) Find the time period of the output pulse.

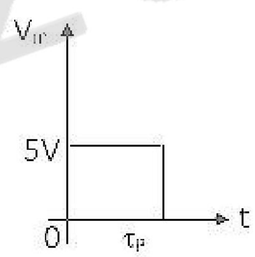

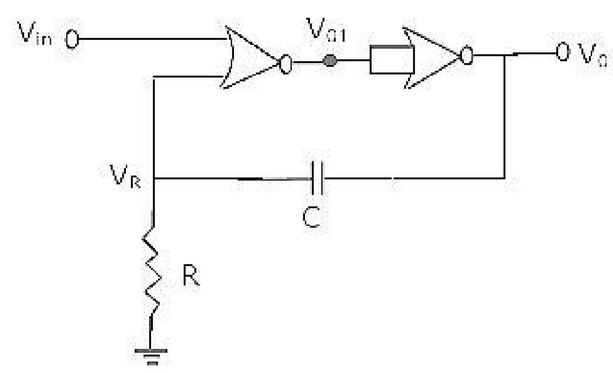

15. The operating conditions (ON = 1, OFF = 0) of three pumps (x,y,z) are to be monitored. x = 1 implies that pump X is on. It is required that the indicator (LED) on the panel should glow when a majority of the pumps fail.

(a) Enter the logical values in the K-map in the format shown in Fig.15(a). derive the minimal Boolean sum of products expression whose output is zero when a majority of the pumps fail.

(b) The above expression is implemented using logic gates, and point P is the output of this circuit, as shown in Fig.P15(b). P is at 0 V when a majority of the pumps fails and is at 5 V otherwise. Design a circuit to drive the LED using this output. The current through the LED should be 10 mA and the

ZOLLEGE.in

voltage drop across it is 1V. Assume that P can source or sink 10 mA and a 5 V supply is available.

	Z	Z
$\bar{x}\,\bar{y}$		
$\bar{x}\,y$		
$x\,y$		
$x\,\bar{y}$		

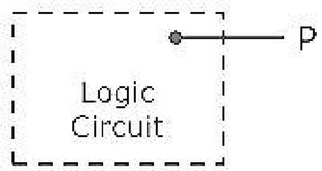

16. A one-bit full adder is to be implemented using 8-to-1 multiplexers (MUX).

(a) Write the truth table for sum (S) and carry to the next stage (C_N) in terms of the two bits (A, B) and carry from the previous stage (C_p). The truth table should be in the ascending order of (A, B, C_p), i.e. (000,001,010,...etc.).

(b) Implement S and C_N using 8-to-1 multiplexers.

17. (a) The program and machine code for an 8085 microprocessor are given by

```
3E   MVI   A     C3
C3
00   NOP
80   ADD   B
3D   DEC   A
C2   JNZ   800A
0A
80
C3   JMP   800C
0C
80
D3   OUT   10
10
76   HLT
```

The starting address of the above program is 7FFF H. What would happen if it is executed from 8000 H?

(b) For the instructions given below, how many memory operations (read/write) are performed during the execution in an 8085 μP?

(c) Write an instruction which takes the minimum possible time to clear the accumulator of the 8085.

ZOLLEGE.in

18. A band limited signal x(t) with a spectrum X(f) as shown in Fig.P18(a) is processed as shown in Fig.P18(b). p(t) is a periodic train of impulses as in Fig.P18(c). The ideal bandpass filter has a passband from 26 KHz to 34 KHz.

(a) Calculate the Fourier series coefficients C_n in the Fourier expansion of p(t) in the form $p(t) = \sum_{n=-\infty}^{+\infty} C_n ex_p\left(\frac{jn2\pi t}{T}\right)$

(b) Find the Fourier Transform of p(t).

(c) Obtain and sketch the spectrum of $x_s(t)$.

(d) Obtain and sketch the spectrum of $y(t)$.

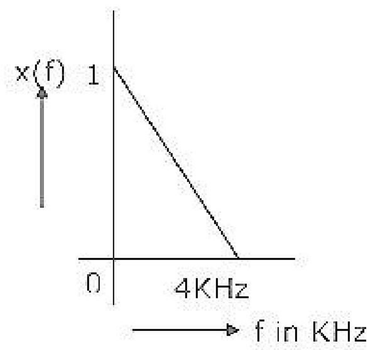

Fig.P18(a)

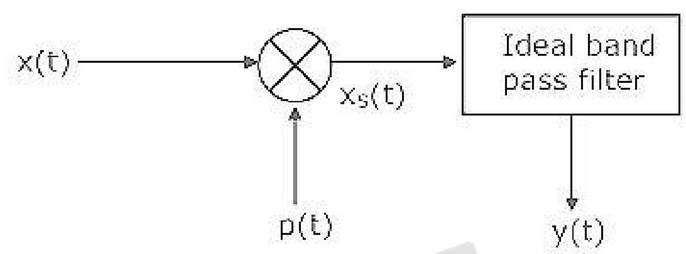

Fig.P18(b)

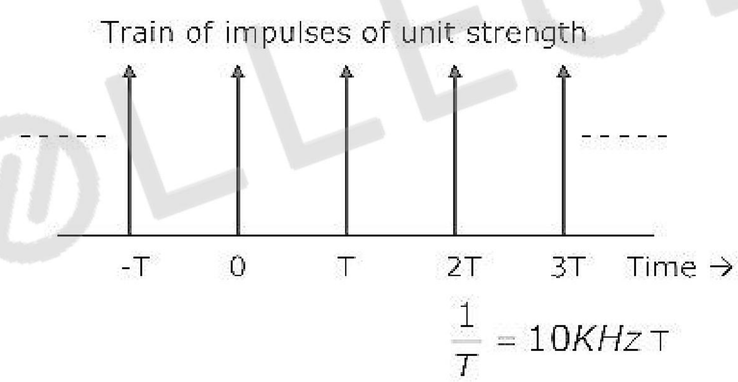

Fig.P18(c)

19. Zero mean white Gaussian noise with a two-sided power spectral density of 4 W/Khz is passed through an ideal lowpass filter with a cut-off frequency of 2 KHz and a pass band gain of 1, to produce the noise output n(t).

(a) Obtain the total power in n(t).

(b) Find the autocorrelation function E[n(t)n(t+τ) of the noise n(t) as a function of τ.

(c) Two noise samples are taken at times t_1 and t_2. Find the spacing $|t_1 - t_2|$ so that the product $n(t_1)n(t_2)$ has the most negative expected value and obtain this most negative expected value.

ZOLLEGE.in

20. Given $E = 10e^{j(4x - kt)}\hat{y}\, V/m$ in free space.

(a) Write all the four Maxwell's equations in free space.

(b) Find $\nabla \times E$.

(c) Find H.

21. The three regions shown in Fig.P21 are all lossless and non-magnetic. Find

(a) Wave impedance in mediums 2 and 3.

(b) d such that medium 2 acts as a quarter wave $\left(\frac{\lambda}{4}\right)$ transformer.

(c) Reflection coefficient (Γ) and voltage standing wave ratio (VSWR) at the interface of the medium 1 and 2, when d = $\left(\frac{\lambda}{4}\right)$

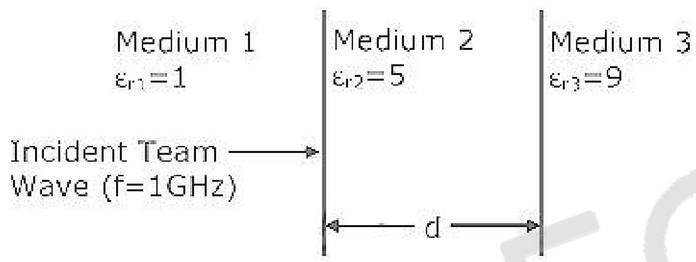

22. Design a lossless impedance matching network shown in Fig.P22 to transform $Z_L = 10 + j10\Omega$ to $Z_{in} = 50\Omega$. Find the values of L, C and quality factor (Q) of the circuit at f = 1GHz.

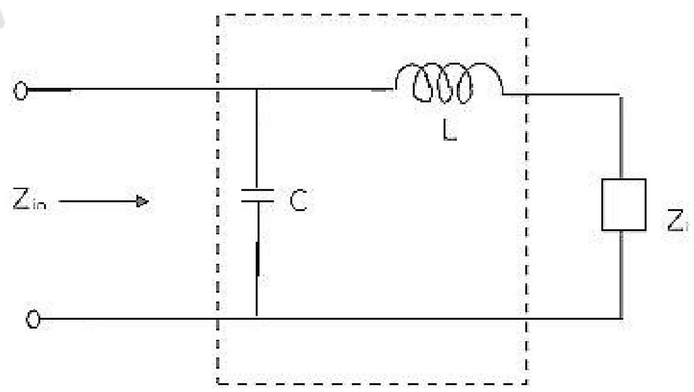

ZOLLEGE.in