1991

1.12 The operating state that distinguishes a silicon controlled rectifier (SCR) from a diode is

(a) forward conduction state (b) forward blocking state

(c) reverse conduction state (d) reverse blocking state

3.2. Match the functions of the following protective elements in SCR applications:

SCR rating	Protective element
(A) di/dt limit	(P) snubber
(B) dυ/dt limit	(Q) heat sink
(C) i^2t limit	(R) series reactor
(D) junction temperature limit	(S) to avoid runway speeds on no-load

8. Figure shows the circuit schematic of a chopper driven, separately excited d.c. motor. The single-pole double-throw switch operates with a switching period (T_{ON}/T_s) is 0.2. The motor may be assumed lossless, with an armature inductance of 10 mH. The motor draws an average current of 20A at a constant back emf of 80 V, under steady state.

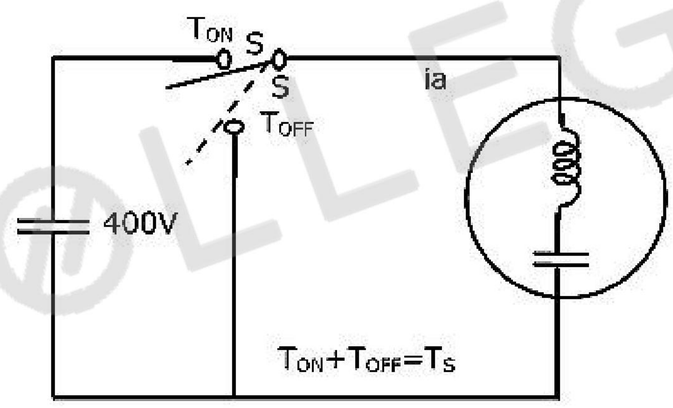

(a) Sketch and label the voltage waveform $v_0(t)$ of the chopper for one switching period.

(b) Sketch and label the motor current $i_a(t)$ for one switching period.

(c) Evaluate the peak-to-peak current ripple of the motor.

ZOLLEGE.in

1992

2.12. In the circuit shown in figure, L is large and the average value of 'i' is 100A. the thyristor is gated in the _____ half cycle of 'e' at a delay angle α equal to _____.

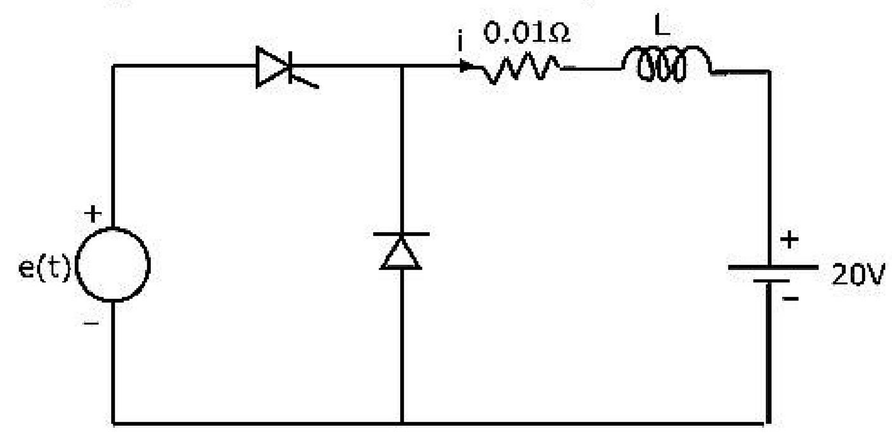

19. A line commutated a.c. to d.c. converter is shown in figure. It operates from a three-phase, 50 Hz, 580 V (line-to-line) supply. It supplies a load current, I_o of 3464 A. Assume I_o to be ripple free and neglect source impedance.

(a) Calculate the delay angle α of the converter if its average output voltage is 648 V.

(b) Calculate the power delivered to the load R in kW.

(c) Sketch the waveform of the supply current i_A vs time (m sec.)

(d) Calculate fundamental reactive power drawn by converter from the supply in kVAR.

1993

6.23. The thermal resistance between the body of a power semiconductor device and the ambient is expressed as

(a) voltage across the device divided by current through the device

(b) average power dissipated in the device divided by the square of the RMS current in the device

(c) average power dissipated in the device divided by the temperature difference from body to ambient.

(d) temperature difference from body to ambient divided by average power dissipated in the device.

6.24. When a line commutated converter operates in the inverter mode

(a) it draws both real and reactive power from the A.C. supply

(b) it delivers both real and reactive power to the A.C. supply

(c) it delivers real power to the A.C. supply

(d) it draws reactive power from the A.C. supply

ZOLLEGE.in

6.25 a chopper operating at a fixed frequency is feeding an R-L load. As the duty ratio of the chopper is increased from 25% to 75%, the ripple in the load current

(a) remains constant

(b) decreases, reaches a minimum at 50% duty ratio and then increases

(c) increases, reaches a minimum at 50% duty ratio and then decreases

(d) keeps on increasing as the duty ratio is increased

7.14. A 3-phase fully controlled thyristor bridge converter is operated from an a.c. supply of 400 V rms line to line. When the converter is operated in the rectifier mode at a control angle α = 30°, the overlap angle (γ) due to the line reactance is 15°. Calculate the reduction in d.c. output voltage due to the overlap. If the converter operates in the inverter mode with a α = 120° and without any change in the d.c. load current, what will be the overlap angle (γ)

7.15. A separately excited d.c. motor has the following name plate data:

220 V, 100 A, 2200 rpm

The armature resistance is 0.1 ohm and inductance is 5 mH. The motor is fed by a chopper which is operating from a d.c. supply of 250 V. Due to restrictions in the power circuit, the chopper can be operated over a duty cycle range from 20% to 80%. Determine the range of speeds over which the motor can be opeated at rated torque.

1994

1.19. A switched mode power supply operating at 20 kHz to 100 kHz range uses as the main switching element

(a) Thyristor (b) MOSFET (c) Triac (d) UJT

1.20. Referring to the figure below, the type of load is:

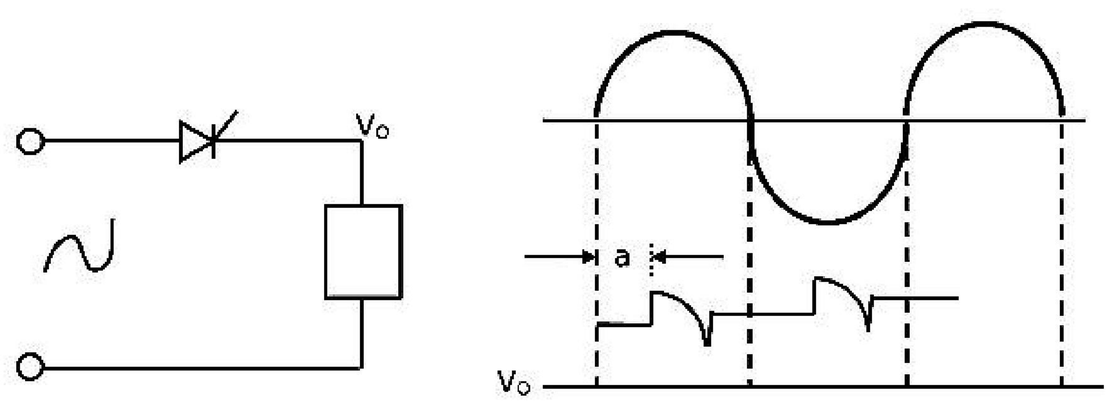

(a) inductive load (b) resistive load

(c) dc motor (d) capacitive load

ZOLLEGE.in

2. Indicate whether the following statements are TRUE or FALSE. Write the indicating work fully and legibly. A 'FALSE' answer must be accompanied by a very brief (preferably one or two sentences) justification. Each correct answer carries ONE mark

2.14. A line-commutated inverter changes dc voltage to ac voltage.

2.15. The output voltage of a six-pulse double star rectifier is the same as that of a three phase half-wave rectifier.

4.17. A triac can be triggered by a gate pulse of _____ polarity.

4.18. Thyristor circuits that directly convert polyphase ac voltages from one frequency to another frequency are called _____.

28. The phase controlled rectifier, shown in figure below, is operating at $\alpha = 45°$ and load current at steady state is constant at I_d. Neglecting source-impedance.

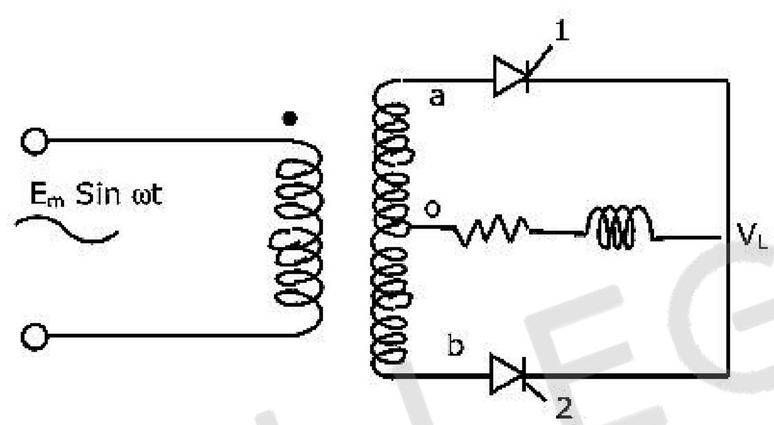

(i) Draw the output voltage

(ii) Device currents

(iii) Voltage across the thyristor 1

ZOLLEGE.in

29. The chopper circuit, shown in figure below, is operating at $K_d = 0.5$ at 100 Hz. The load current is continuous at steady state but varies between 10 A and 3A. Draw the following wave shapes of currents through,

(i) load (i_L)

(ii) free wheeling diode (i_f)

(iii) commutation capacitor (i_c)

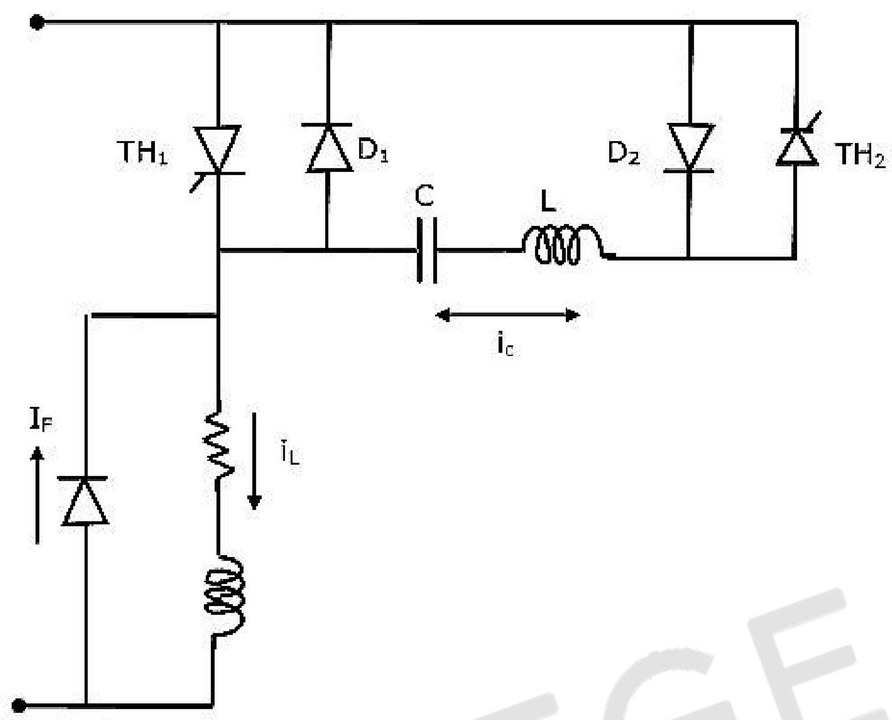

1995

1.22. A single phase diode bridge rectifier supplies a highly inductive load. The load current can be assumed to be ripple free. The ac supply side current waveform will be:

(a) sinusoidal (b) constant dc (c) square (d) triangular

1.23. A dc to dc transistor chopper supplied from a fixed voltage dc source feeds a fixed resistive-inductive load and a free-wheeling diode. The chopper operates at 1 kHz and 50% duty cycle. Without changing the value of the average dc current through the load, if it is desired to reduce the ripple content of load current, the control action needed will be:

(a) increase the chopper frequency keeping its duty cycle constant

(b) increase the chopper frequency and duty cycle in equal ratio

(c) decrease only the chopper frequency

(d) decrease only the duty cycle.

1.24. An inverter capable of supplying a balanced three-phase variable voltage variable frequency output is feeding a three-phase induction motor rated for 50 Hz and 440V. The stator winding resistances of the motor are negligible small. During starting, the current inrush can be avoided without sacrificing the starting torque by suitably applying:

(a) low voltage at rated frequency

ZOLLEGE.in

(b) low voltage keeping the V/f ratio constant
(c) rated voltage at low frequency
(d) rated voltage at rated frequency

2.22. A three phase ac-to-dc diode bridge rectifier is supplied from a three-phase, 440V source. The rectifier supplies a purely resistive load. The average dc voltage across the load will be _____V.

2.23. A single phase inverter with square wave output voltage will have in its output waveform a fifth harmonic component equal to _____ percentage of the fundamental.

2.24. Consider the chopper circuit of figure. The chopper operates at 400 Hz and 50% duty cycle. The load current remains almost ripple free at 10A. Assuming the input voltage to be 200V and the devices to be ideal, the turn-off time available to the thyristor Th M is _____ μs.

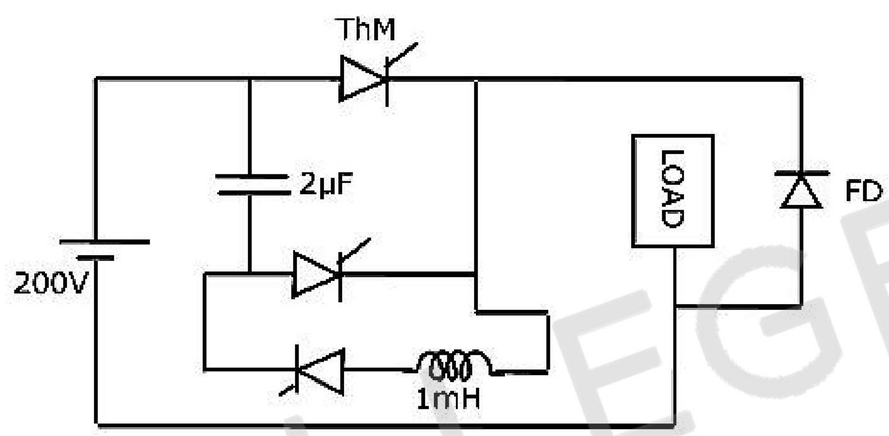

2.25. Figure, show two thyristors each rated 500A (continuous) sharing a load current. Current through thyristor y is 120A. The current through thyristor x will be nearly _____ A.

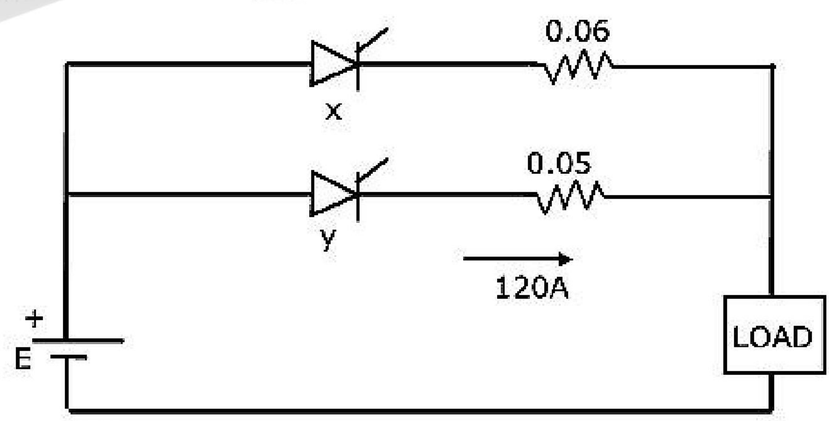

3.5 Output wave forms:

(a)

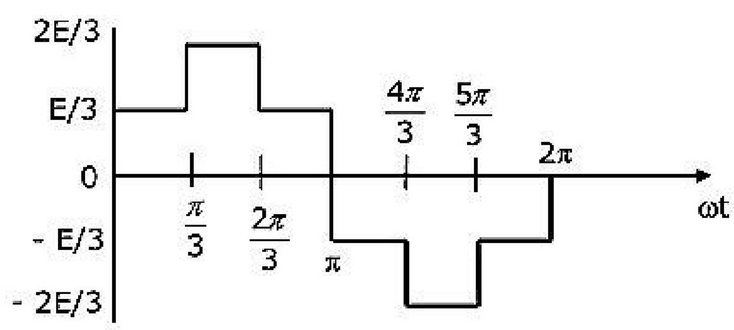

(P) single phase fully controlled ac-dc converter

(Q) Voltage commutated dc-ac chopper (E = input dc voltage)

(R) Phase voltage of a star connected balanced three-phase load fed from a three-

ZOLLEGE.in

phase inverter with 180° conduction. (input dc voltage=E)

(S) Line voltage of a six stepped inverter with input dc voltage E

(T) Three-phase diode bridge rectifier.

(b)

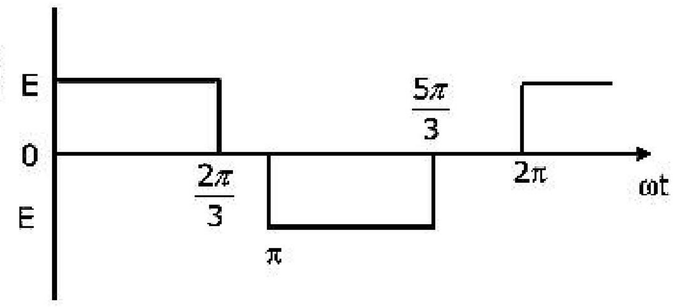

(c)

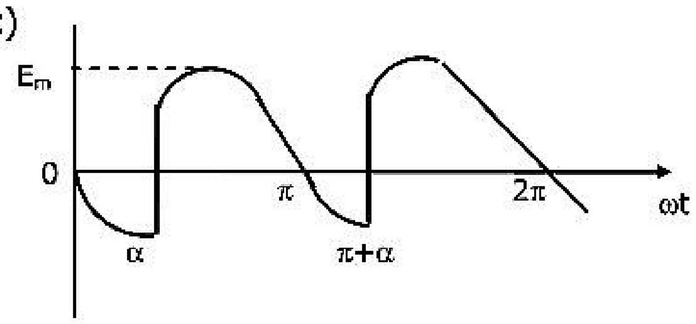

(d)

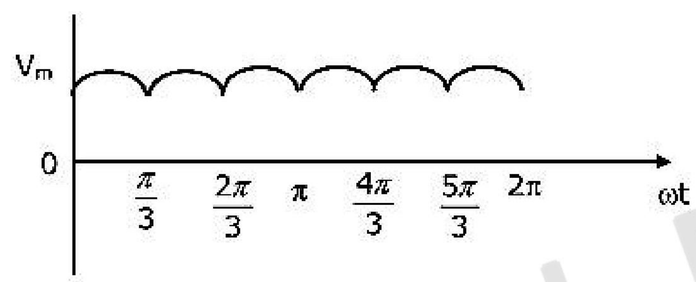

(e)

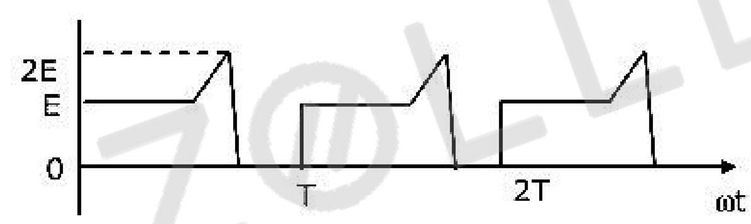

ZOLLEGE.in