Q.1 – Q.30 Carry One Mark Each

1. The minimum number of equations required to analyze the circuit shown in Fig.Q.1 is

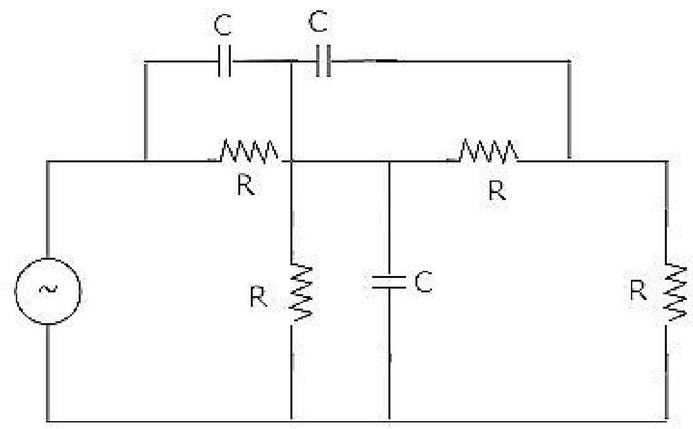

(a) 3 (b) 4 (c) 6 (d) 7

2. A source of angular frequency 1 rad/sec has a source impedance consisting of 1Ω resistance in series with 1 H inductance. The load that will obtain the maximum power transfer is

(a) 1 Ω resistance

(b) 1 Ω resistance in parallel with 1 H inductance

(c) 1 Ω resistance in series with 1 F capacitor

(d) 1 Ω resistance in parallel with 1 F capacitor

3. A series RLC circuit has a resonance frequency of 1 kHz and a quality factor Q = 100. If each R, L and C is doubled from its original value, the new Q of the circuit is

(a) 25 (b) 50 (c) 100 (d) 200

4. The Laplace transform of *i(t)* is given by $I(s) = \frac{2}{s(1+s)}$

As t → ∞, the value of i(t) tends to

(a) 0 (b) 1 (c) 2 (d) ∞

5. The differential equation for the current i(t) in the circuit of Figure Q.5 is

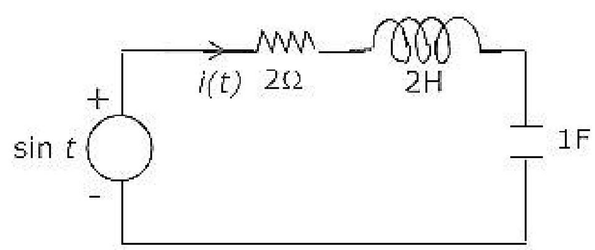

(a) $2\frac{d^2i}{dt^2} + 2\frac{di}{dt} + i(t) = \sin t$

(b) $\frac{d^2i}{dt^2} + 2\frac{di}{dt} + 2i(t) = \cos t$

(c) $2\frac{d^2i}{dt^2} + 2\frac{di}{dt} + i(t) = \cos t$

(d) $\frac{d^2i}{dt^2} + 2\frac{di}{dt} + 2i(t) = \sin t$

ZOLLEGE.in

6. n-type silicon is obtained by doping silicon with

(a) Germanium (b) Aluminum (c) Boron (d) Phosphorus

7. The bandgap of silicon at 300 K is

(a) 1.36 eV (b) 1.10 eV (c) 0.80 eV (d) 0.67 eV

8. The intrinsic carrier concentration of silicon sample of 300 K is $1.5 \times 10^{16}/m^3$. If after doping, the number of majority carriers is $5 \times 10^{20}/m^3$, the minority carrier density is

(a) $4.50 \times 10^{11}/m^3$ (b) $3.33 \times 10^{4}/m^3$

(c) $5.00 \times 10^{20}/m^3$ (d) $3.00 \times 10^{-5}/m^3$

9. Choose proper substitutes for X and Y to make the following statement correct Tunnel diode and Avalanche photodiode are operated in X bias and Y bias respectively.

(a) X: reverse, Y: reverse (b) X: reverse, Y: forward

(c) X: forward, Y: reverse (d) X: forward, Y: forward

10. For an n-channel enhancement type MOSFET, if the source is connected at a higher potential than that of the bulk (i.e. $V_{SB} > 0$), the threshold voltage V_T of the MOSFET will

(a) remain unchanged (b) decrease

(c) change polarity (d) increase

11. Choose the correct match for input resistance of various amplifier configurations shown below.

Configuration	Input resistance
CB: Common Base	LO: Low
CC: Common Collector	MO: Moderate
CE: Common Emitter	HI: High

(a) CB-LO, CC-MO, CE-HI (b) CB-LO, CC-HI, CE-MO

(c) CB-MO, CC-HI, CE-LO (d) CB-HI, CC-LO, CE-MO

12. The circuit shown in figure is best described as a

(a) bridge rectifier

(b) ring modulator

(c) frequency discriminatory

(d) voltage doubler

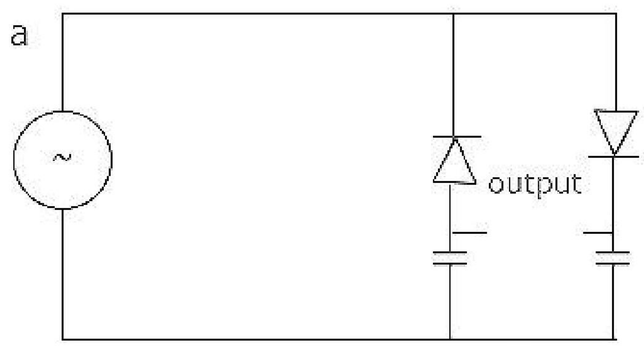

ZOLLEGE.in

13. If the input to the ideal comparator shown in figure is a sinusoidal signal of 8V (peak to peak) without any DC component, then the output of the comparator has a duty cycle of

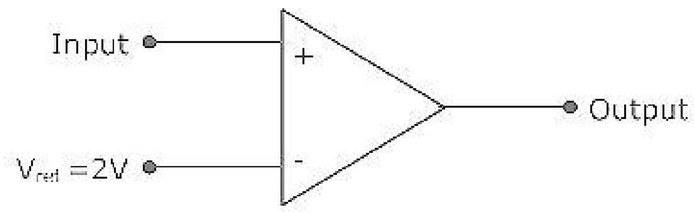

(a) $\frac{1}{2}$ (b) $\frac{1}{3}$ (c) $\frac{1}{6}$ (d) $\frac{q}{12}$

14. If the differential voltage gain and the common mode voltage gain of a differential amplifier are 48 dB and 2 dB respectively, then its common mode rejection ratio is

(a) 23 dB (b) 25 dB (c) 46 dB (d) 50 dB

15. Generally, the gain of a transistor amplifier falls at high frequencies due to the

(a) internal capacitances of the device
(b) coupling capacitor at the input
(c) skin effect
(d) coupling capacitor at the output

16. The number of distinct Boolean expression of 4 variables is

(a) 16 (b) 256 (c) 1024 (d) 65536

17. The minimum number of comparators required to build an 8 it flash ADC is

(a) 8 (b) 63 (c) 255 (d) 256

18. The output of the 74 series of TTL gates is taken from a BJT in

(a) totem pole and common collector configuration
(b) either totem pole or open collector configuration
(c) common base configuration
(d) common collector configuration

19. Without any additional circuitry, an 8:1 MUX can be used to obtain

(a) some but not all Boolean functions of 3 variables
(b) all function of 3 variables but none of 4 variables
(c) all functions of 3 variables and some but not all of 4 variables
(d) all functions of 4 variables

ZOLLEGE.in

20. A 0 to 6 counter consists of 3 flip flops and a combination circuit of 2 input gate(s). The combination circuit consists of

(a) one AND gate
(b) one OR gate
(c) one AND gate and one OR gate
(d) two AND gates

21. The Fourier series expansion of a real periodic signal with fundamental frequency f_0 is given by $g_p(t) = \sum_{n=-\infty}^{\infty} c_n e^{j2\pi n f_0 t}$ it is given that $C_3 = 3 + j5$. Then C_{-3} is

(a) 5+j3
(b) -3-j5
(c) -5+j3
(d) 3-j5

22. Let x(t) be the input to a linear, time-invariant system. The required output is 4x(t-2). The transfer function of the system should be

(a) $4e^{j4\pi f}$
(b) $2e^{-j8\pi f}$
(c) $4e^{-j4\pi f}$
(d) $2e^{j8\pi f}$

23. A sequence x(n) with the z-transform $X(z) = z^4 + z^2 - 2z + 2 - 3z^{-4}$ is applied as an input to a linear, time-invariant system with the impulse response h(n) = 2δ(n-3) where

$$\delta(n) = \begin{cases} 1, n = 0 \\ 0, \text{ otherwise} \end{cases}$$

The output at n = 4 is

(a) -6
(b) zero
(c) 2
(d) -4

24. Figure shows the Nyquist plot of the open-loop transfer function G(s)H(s) of a system. If G(s)H(s) has one right hand pole, the closed loop system is

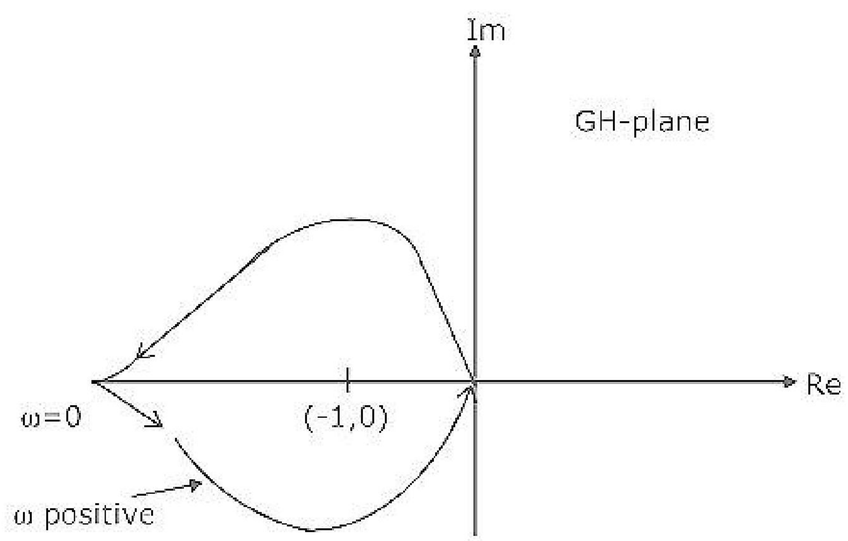

(a) always stable
(b) unstable with one closed loop right hand pole
(c) unstable with two closed loop right hand poles
(d) unstable with three closed loop right hand poles

ZOLLEGE.in

25. A PD controller is used to compensate a system. Compared to the uncompensated system, the compensated system has

(a) a higher type number
(b) reduced damping
(c) higher noise amplification
(d) larger transient overshoot

26. The input to a coherent detector is DSB-SC signal plus noise. The noise at the detector output is

(a) the in-phase component
(b) the quadrature-component
(c) zero
(d) the envelope

27. The noise at the input to an ideal frequency detector is white. The detector is operating above threshold. The power spectral density of the noise at the output is

(a) raised cosine
(b) flat
(c) parabolic
(d) Gaussian

28. At a given probability of error, binary coherent FSK is inferior to binary coherent PSK by

(a) 6 dB
(b) 3 dB
(c) 2 dB
(d) 0 dB

29. The unit of $\nabla \times H$ is

(a) Ampere
(b) Ampere/meter
(c) Ampere/meter^2
(d) Ampere-meter

30. The depth of penetration of electromagnetic wave in a medium having conductivity σ at a frequency of 1 MHz is 25 cm. The depth of penetration at a frequency of 4 MHz will be

(a) 6.25 cm
(b) 12.50 cm
(c) 50.00 cm
(d) 100.00 cm

Q.31 – Q.90 Carry Two Marks Each

31. Twelve 1Ω resistances are used as edges to form a cube. The resistance between two diagonally opposite corners of the cube is

(a) $\frac{5}{6}\Omega$
(b) $\frac{1}{6}\Omega$
(c) $\frac{6}{5}\Omega$
(d) $\frac{3}{2}\Omega$

32. The current flowing through the resistance R in the circuit in figure has the form P cos 4*t*, where P is

(a) (0.18+j0.72)
(b) (0.46+j1.90)
(c) -(0.18+j1.90)
(d) -(0.192+j0.144)

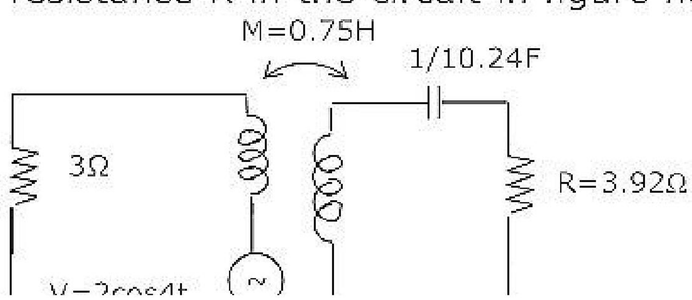

ZOLLEGE.in

The circuit for **Q.33-34** is given in figure. For both the questions, assume that the switch S is in position 1 for a long time and thrown to position 2 at t = 0.

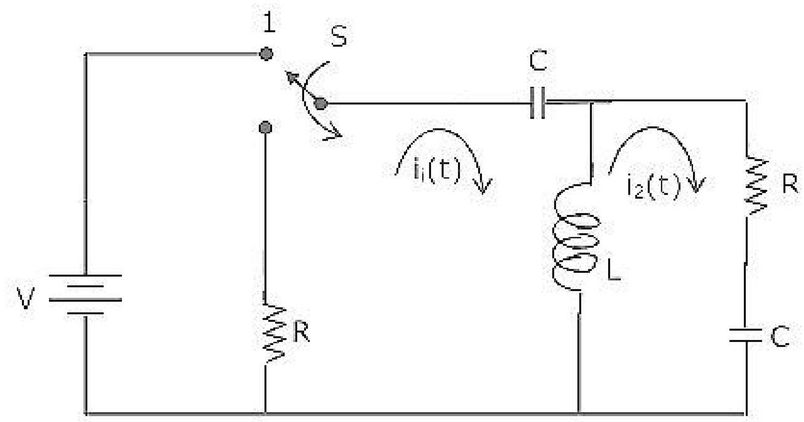

33. At $t = 0^+$, the current i_1 is

(a) $\frac{-V}{2R}$ (b) $\frac{-V}{R}$ (c) $\frac{-V}{4R}$ (d) zero

34. $I_1(s)$ and $I_2(s)$ are the Laplace transforms of $i_1(t)$ and $i_2(t)$ respectively. The equations for the loop currents $I_1(s)$ and $I_2(s)$ for the circuit shown in figure Q.33-34, after the switch is brought from position 1 to position 2 at t = 0, are

(a) $\begin{bmatrix} R+Ls+\frac{1}{Cs} & -Ls \\ -Ls & R+\frac{1}{Cs} \end{bmatrix}\begin{bmatrix} I_1(s) \\ I_2(s) \end{bmatrix} = \begin{bmatrix} \frac{V}{s} \\ 0 \end{bmatrix}$

(b) $\begin{bmatrix} R+Ls+\frac{1}{Cs} & -Ls \\ -Ls & R+\frac{1}{Cs} \end{bmatrix}\begin{bmatrix} I_1(s) \\ I_2(s) \end{bmatrix} = \begin{bmatrix} -\frac{V}{s} \\ 0 \end{bmatrix}$

(c) $\begin{bmatrix} R+Ls+\frac{1}{Cs} & -Ls \\ -Ls & R+Ls+\frac{1}{Cs} \end{bmatrix}\begin{bmatrix} I_1(s) \\ I_2(s) \end{bmatrix} = \begin{bmatrix} \frac{V}{s} \\ 0 \end{bmatrix}$

(d) $\begin{bmatrix} R+Ls+\frac{1}{Cs} & -Ls \\ -Ls & R+Ls+\frac{1}{Cs} \end{bmatrix}\begin{bmatrix} I_1(s) \\ I_2(s) \end{bmatrix} = \begin{bmatrix} -\frac{V}{s} \\ 0 \end{bmatrix}$

35. An input voltage v(t) = $10\sqrt{2}\cos(t+10°)+10\sqrt{3}\cos(2t+10°)V$ is applied to a series combination of resistance R = 1Ω and an inductance L = 1H. The resulting steady state current i(t) in ampere is

ZOLLEGE.in

(a) $10\cos(t+55°)+10\cos\left(2t+10°+\tan^{-1}2\right)$

(b) $10\cos(t+55°)+10\sqrt{\frac{3}{2}}\cos(2t+55°)$

(c) $10\cos(t-35°)+10\cos\left(2t+10°-\tan^{-1}2\right)$

(d) $10\cos(t-35°)+10\sqrt{\frac{3}{2}}\cos(2t-35°)$

36. The driving point impedance Z(s) of a network has the pole-zero locations as shown in figure. If Z(0) =3, then Z(s) is

(a) $\frac{3(s+3)}{s^2+2s+3}$

(b) $\frac{2(s+3)}{s^2+2s+2}$

(c) $\frac{3(s-3)}{s^2-2s-2}$

(d) $\frac{2(s-3)}{s^2-2s-3}$

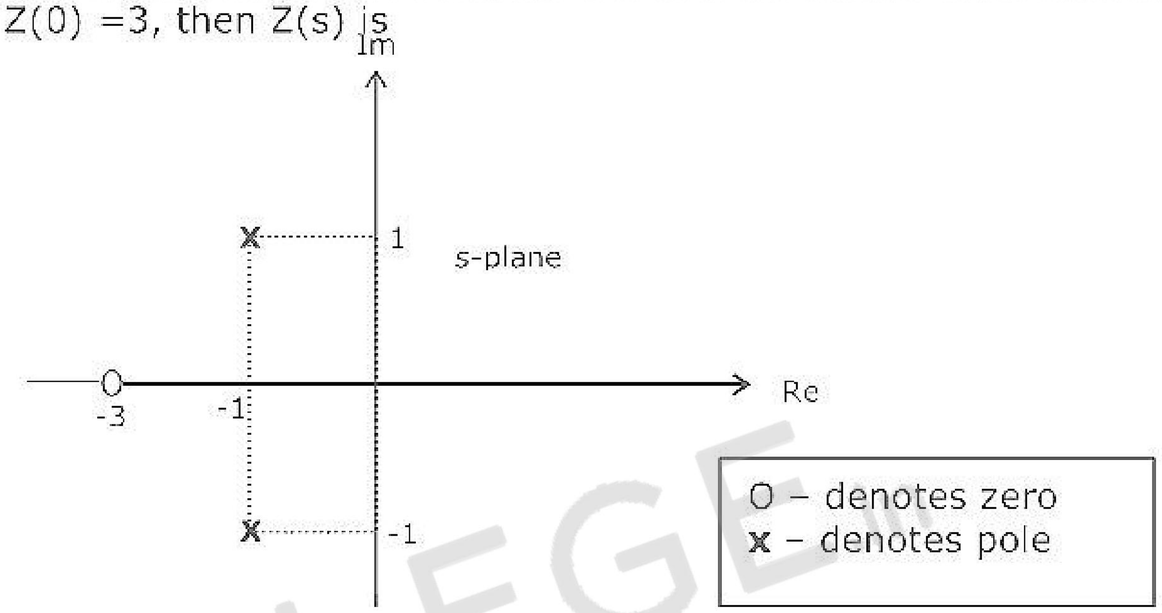

37. The impedance parameters Z_{11} and Z_{12} of the two-port network in figure are

(a) Z_{11} = 2.75Ω and Z_{12} =0.25Ω

(b) Z_{11} = 3Ω and Z_{12} =0.5Ω

(c) Z_{11} = 3Ω and Z_{12} =0.25Ω

(d) Z_{11} = 2.25Ω and Z_{12} =0.5Ω

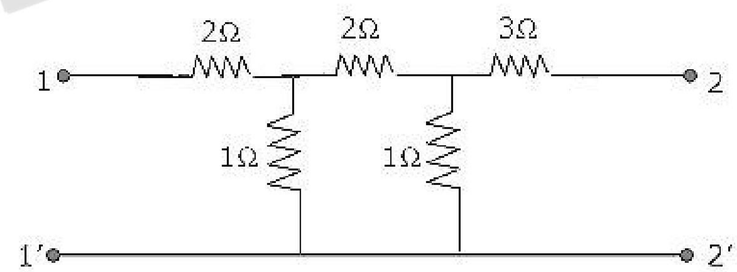

38. An *n*-type silicon bar 0.1 cm long and μm^2 in cross-sectional area has a majority carrier concentration of $5 \times 10^{20}/m^3$ and the carrier mobility is $0.13 m^2/V\text{-}s$ at 300K. if the charge of an electron is 1.6×10^{-19} coulomb, then the resistance of the bar is

(a) 10^6 ohm (b) 10^4 ohm (c) 10^{-1} ohm (d) 10^{-4} ohm

39. The electron concentration in a sample of uniformly doped n-type silicon at 300 K varies linearly from $10^{17}/cm^3$ at x = 0 to $6 \times 10^{16}/cm^3$ at x = 2μm. Assume a situation that electrons are supplied to keep this concentration gradient constant with time. If electronic charge is 1.6×10^{-19} coulomb and the diffusion constant D_n = 35 cm^2/s, the current density in the silicon, if no electric field is present, is

(a) zero (b) -112 A/cm^2

(c) +1120 A/cm^2 (d) -1112 A/cm^2

ZOLLEGE.in

40. Match items in Group 1 with items in Group 2, most suitably.

Group 1		Group 2	
P	LED	1	Heavy doping
Q	Avalanche photodiode	2	Coherent radiation
R	Tunnel diode	3	Spontaneous emission
S	LASER	4	Current gain

(a) P – 1 Q – 2 R – 4 S - 3
(b) P – 2 Q – 3 R – 1 S - 4
(c) P – 3 Q – 4 R – 1 S - 2
(d) P – 2 Q – 1 R – 4 S - 3

41. At 300 K, for a diode current of 1 mA, a certain germanium diode requires a forward bias of 0.1435V, whereas a certain silicon diode requires a forward bias of 0.718V. Under the conditions stated above, the closest approximation of the ratio of reverse saturation current in germanium diode to that in silicon diode is

(a) 1 (b) 5 (c) 4×10^3 (d) 8×10^3

42. A particular green LED emits light of wavelength 5490°A. The energy bandgap of the semiconductor material used there is (Planck's constant = 6.626×10^{-34} J-s)

(a) 2.26 eV (b) 1.98 eV (c) 1.17 eV (d) 0.74 eV

43. When the gate-to-source voltage (V_{GS}) of a MOSFET with threshold voltage of 400mV, working in saturation is 900 mV, the drain current in observed to be 1 mA. Neglecting the channel width modulation effect and assuming that the MOSFET is operating at saturation, the drain current for an applied V_{GS} of 1400 mV is

(a) 0.5 mA (b) 2.0 mA (c) 3.5 mA (d) 4.0 mA

44. If P is Passivation, Q is n-well implant, R is metallization and S is soruce/drain diffusion, then the order in which they are carried out in a standard *n*-well CMOS fabrication process, is

(a) P-Q-R-S (b) Q-S-R-P (c) R-P-S-Q (d) S-R-Q-P

45. An amplifier without feedback has a voltage gain of 50, input resistance of 1 KΩ and output resistance of 2.5 KΩ. The input resistance of the current-shunt negative feedback amplifier using the above amplifier with a feedback factor of 0.2, is

(a) $\frac{1}{11} K\Omega$ (b) $\frac{1}{5} K\Omega$ (c) 5 KΩ (d) 11 KΩ

ZOLLEGE.in

46. In the amplifier circuit shown in figure, the values of R_1 and R_2 are such that the transistor is operating at V_{CE}= 3V and I_C = 1.5mA when its β is 150. For a transistor with β of 200, the operating point (V_{CE}, I_C) is

(a) (2V, 2 mA)

(b) (3V, 2 mA)

(c) (4V, 2 mA)

(d) (4V, 1 mA)

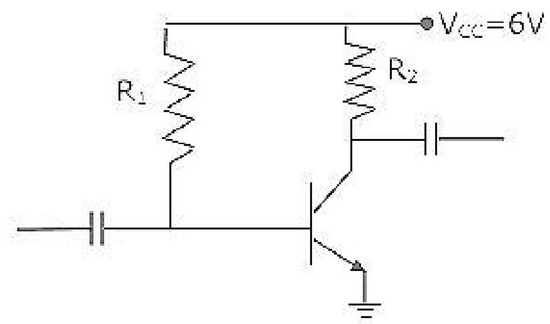

47. The oscillator circuit shown in figure has an ideal inverting amplifier. Its frequency of oscillation (in Hz) is

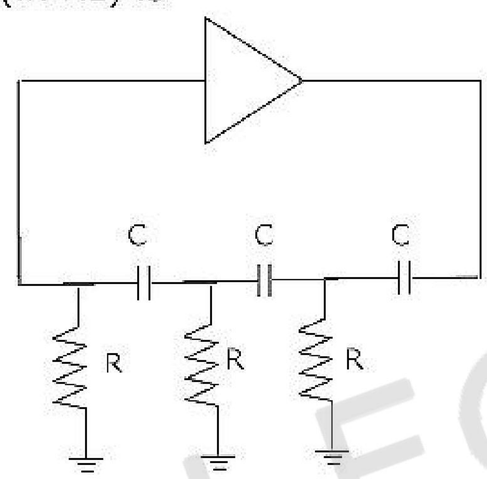

(a) $\frac{1}{(2\pi\sqrt{6}RC)}$ (b) $\frac{1}{(2\pi RC)}$ (c) $\frac{1}{(\sqrt{6}RC)}$ (d) $\frac{\sqrt{6}}{(2\pi RC)}$

48. The output voltage of the regulated power supply shown in figure is

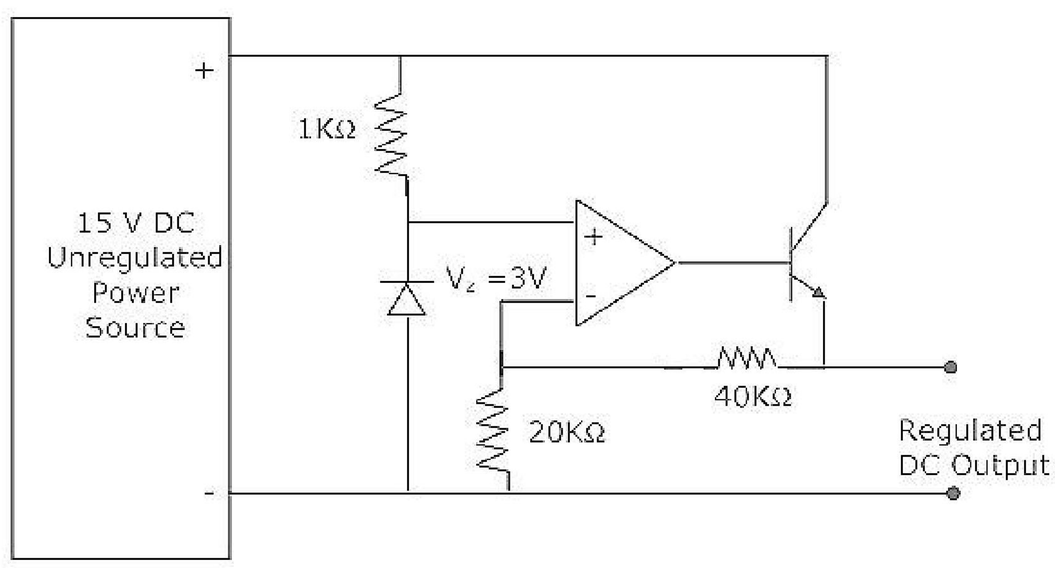

(a) 3V (b) 6V (c) 9V (d) 12V

ZOLLEGE.in

49. The action of a JFET in its equivalent circuit can best be represented as a

(a) Current Controlled Current Source

(b) Current Controlled Voltage Source

(c) Voltage Controlled Voltage Source

(d) Voltage Controlled Current Source

50. If the op-amp in figure is ideal, the output voltage V_{out} will be equal to

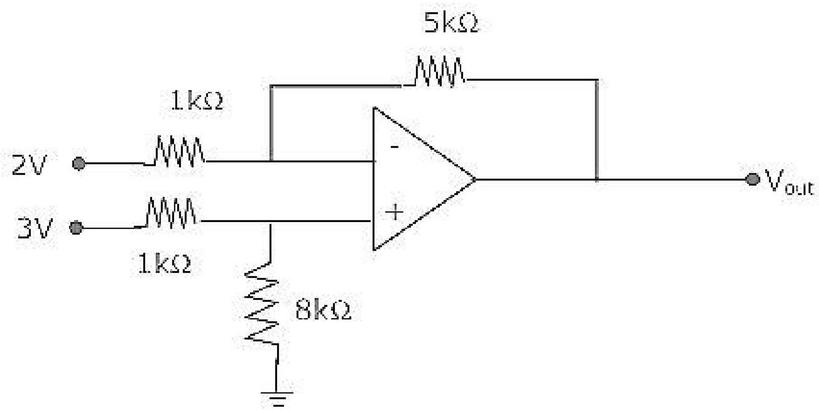

(a) 1V

(b) 6V

(c) 14V

(d) 17V

51. Three identical amplifiers with each one having a voltage gain of 50, input resistance of 1 KΩ and output resistance of 250Ω, are cascaded. The open circuit voltage gain of the combined amplifier is

(a) 49 dB (b) 51 dB (c) 98 dB (d) 102 dB

52. An ideal sawtooth voltage waveform of frequency 500 Hz and amplitude 3V is generated by charging a capacitor of 2 μF in every cycle. The charging requires

(a) constant voltage source of 3 V for 1 ms

(b) constant voltage source of 3 V for 2 ms

(c) constant current source of 3 mA for 1 ms

(d) constant current source of 3 mA for 2 ms

53. The circuit shown in figure has 4 boxes each described by inputs P, Q, R and outputs Y, Z with

$Y = P \oplus Q \oplus R$

$Z = RQ + \overline{P}R + Q\overline{P}$

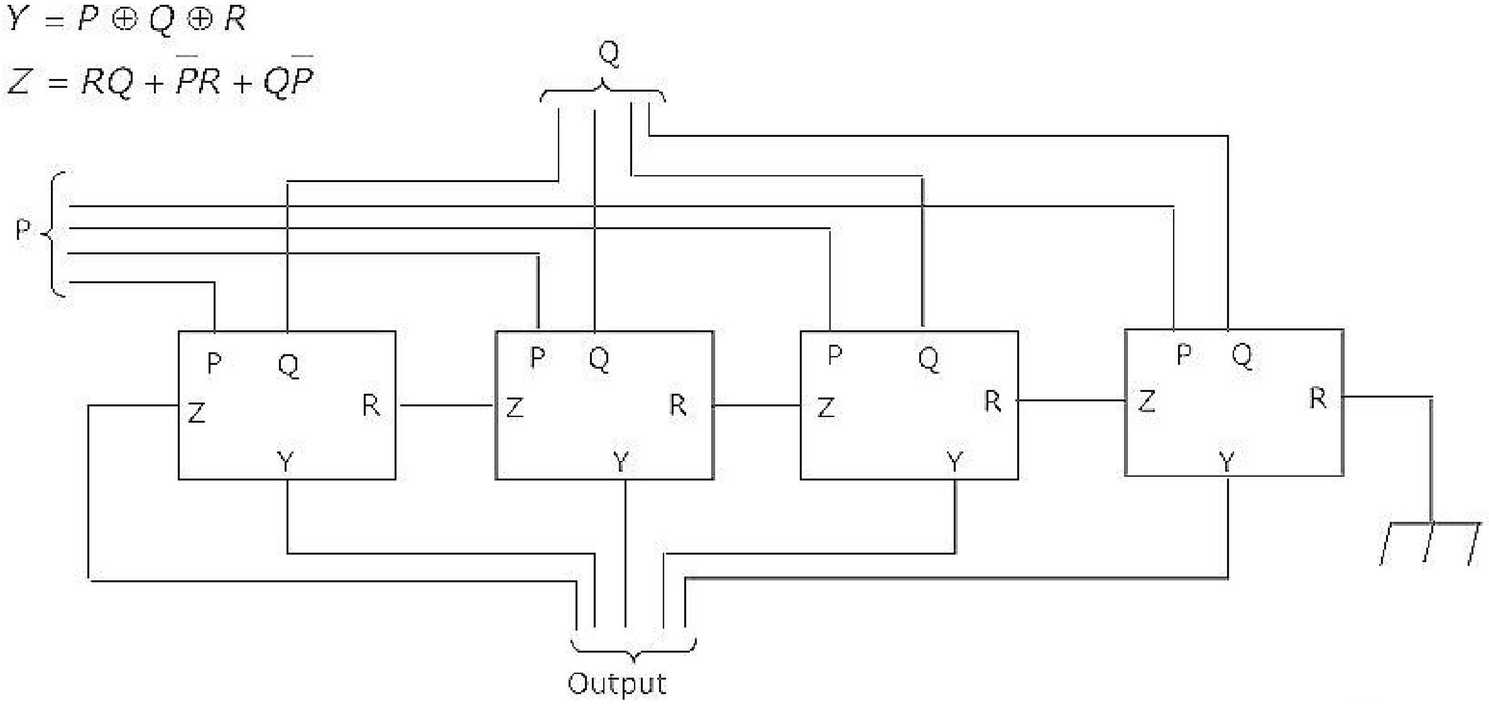

ZOLLEGE.in

The circuit acts as a

(a) 4 bit adder giving P + Q
(b) 4 bit subtractor-giving P - Q
(c) 4 bit subtractor-giving Q - P
(d) 4 bit adder giving P + Q + R

54. If the functions W, X, Y and Z are as follows

$W = R + \overline{P}Q + \overline{R}S$

$X = PQ\overline{R}\ \overline{S} + \overline{P}\ \overline{Q}\ \overline{R}\ \overline{S} + P\ \overline{Q}\ \overline{R}\ \overline{S}$

$Y = RS + \overline{PR + P\overline{Q} + \overline{P}.\overline{Q}}$

$Z = R + S + \overline{PQ + \overline{P}.\overline{Q}.\overline{R} + P\overline{Q}.\overline{S}}$

Then

(a) W = Z, X = $\overline{Z}$
(b) W = Z, X = Y
(c) W = Y
(d) W = Y = $\overline{Z}$

55. A 4 bit ripple counter and a 4 bit synchronous counter are made using flip-flops having a propagation delay of 10 ns each. If the worst case delay in the ripple counter and the synchronous counter be R and S respectively, then

(a) R = 10 ns, S = 40 ns
(b) R = 40 ns, S = 10 ns
(c) R = 10 ns, S = 30 ns
(d) R = 30 ns, S = 10 ns

56. The DTL, TTL, ECL and CMOS families of digital ICs are compared in the following 4 columns

	(P)	(Q)	(R)	(S)
Fanout is minimum	DTL	DTL	TTL	CMOS
Power consumption is minimum	TTL	CMOS	ECL	DTL
Propagation delay is minimum	CMOS	ECL	TTL	TTL

The correct column is

(a) P
(b) Q
(c) R
(d) S

57. The circuit shown in figure is a 4-bit DAC

The input bits 0 and 1 are represented by 0 and 5 V respectively. The OP AMP is ideal, but all the resistances and the 5V inputs have a tolerance of ±10%. The specification (rounded to the nearest multiple of 5%) for the tolerance of the DAC is

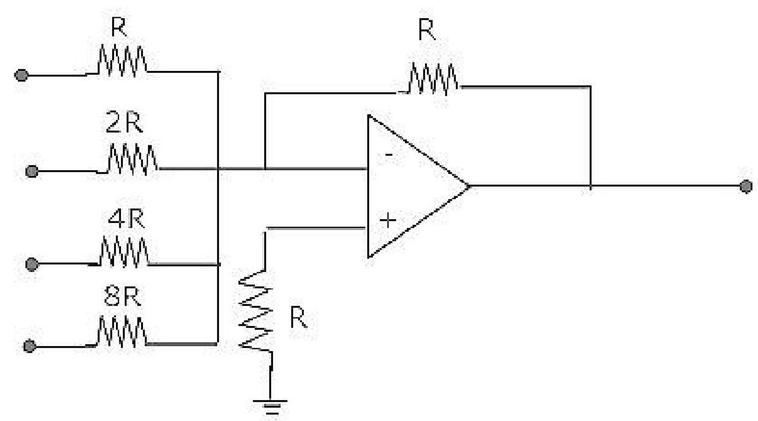

(a) ±35%
(b) ±20%
(c) ±10%
(d) ±5%

ZOLLEGE.in

58. The circuit shown in figure converts

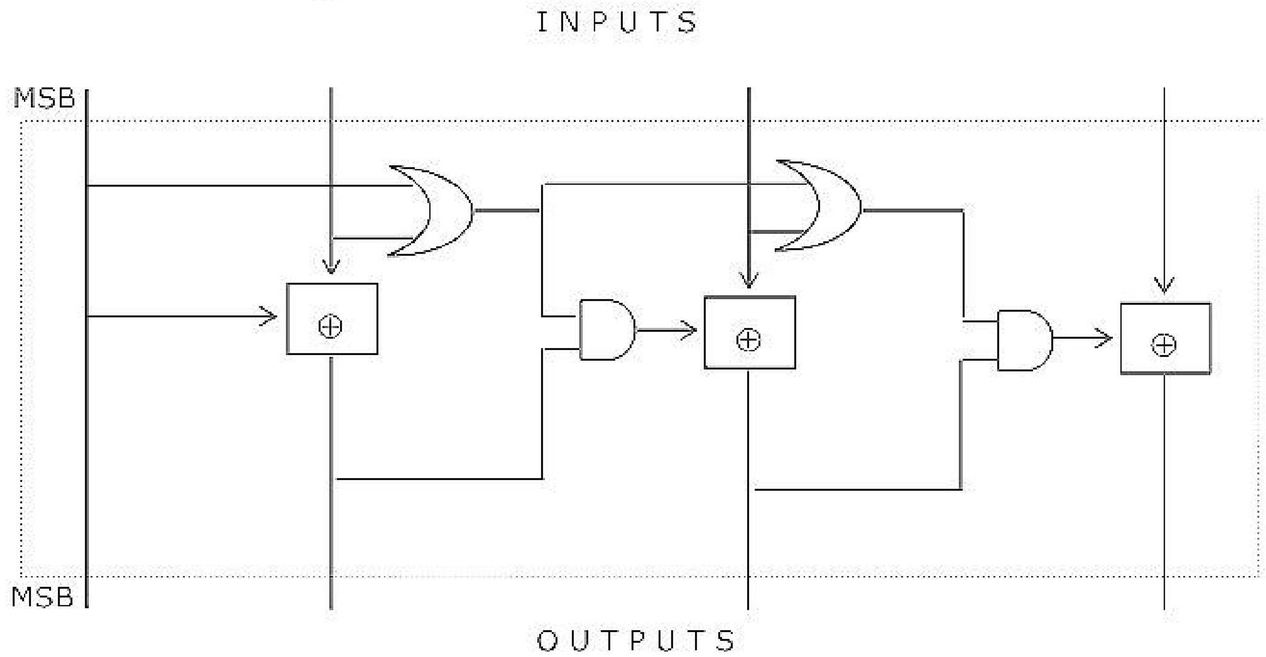

(a) BCD to binary code
(b) Binary to excess – 3 code
(c) Excess – 3 to Gray code
(d) Gray to Binary code

59. In the circuit shown in Figure, A is a parallel in, parallel-out 4-bit register, which loads at the rising edge of the clock C. The input lines are connected to a 4-bit bus, W. Its output acts as the input to a 16×4 ROM whose output is floating when the enable input E is 0. A partial table of the contents of the ROM is as follows

Address	0	2	4	6	8	10	11	14
Data	0011	1111	0100	1010	1011	1000	0010	1000

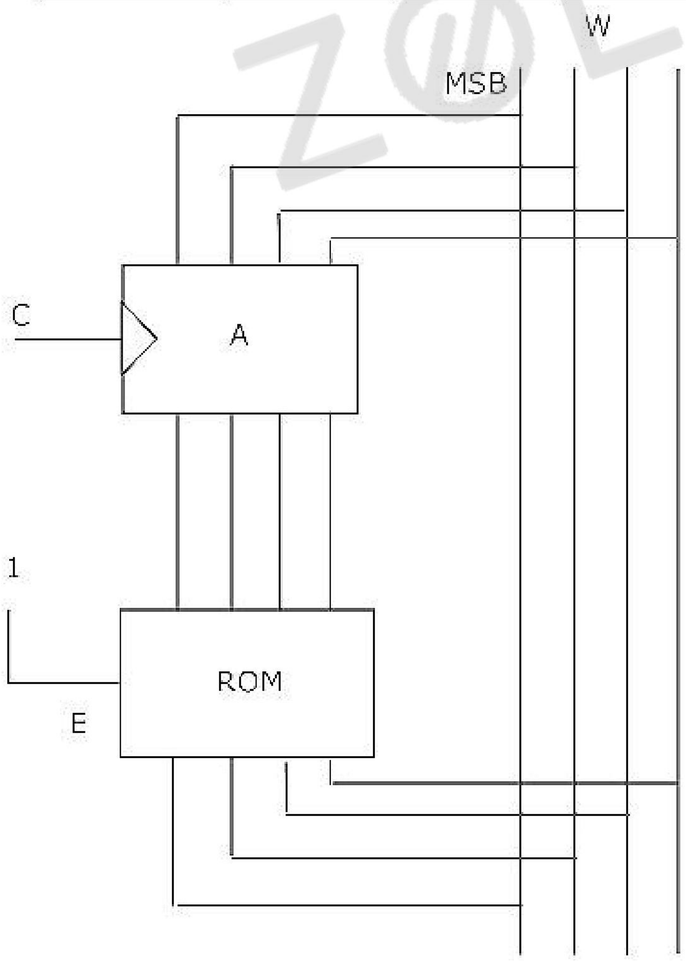

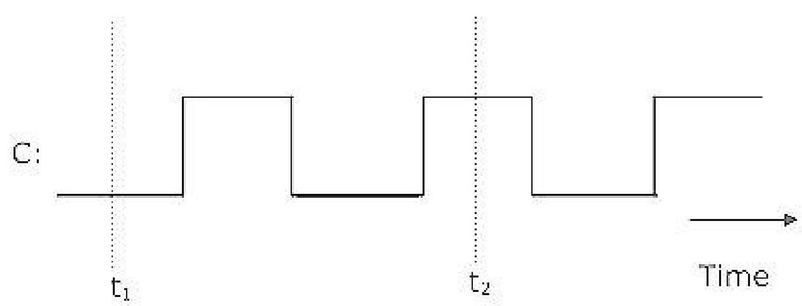

ZOLLEGE.in

The clock to the register is shown, and the data on the W bus at time t_1 is 0110. The data on the bus at time t_2 is

(a) 1111 (b) 1011 (c) 1000 (d) 0010

60. In an 8085 microprocessor, the instruction CMP B has been executed while the content of the accumulator is less than that of register B. As a result

(a) Carry flag will be set but Zero flag will be reset

(b) Carry flag will be reset but Zero flag will be set

(c) Both Carry flag and Zero flag will be reset

(d) Both Carry flag and Zero flag will be set

61. Let X and Y be two statistically independent random variables uniformly distributed in the ranges (-1,1) and (-2,1) respectively. Let Z = X + Y. then the probability that [Z≤-2] is

(a) zero (b) $\frac{1}{6}$ (c) $\frac{1}{3}$ (d) $\frac{1}{12}$

62. Let P be linearity, Q be time-invariance, R be causality and S be stability. A discrete time system has the input-output relationship,

$$y(n) = \begin{cases} x(n), & n \geq 1 \\ 0, & n = 0 \\ x(n+1), & n \leq -1 \end{cases}$$

where x(n) is the input and y(n) is the output. The above system has the properties

(a) P, S but not Q, R (b) P, Q, S but not R

(c) P, Q, R, S (d) Q, R, S but not P

Data for **Q.63-64** are given below. Solve the problems and choose the correct answers.

The system under consideration is an RC low-pass filter (RC-LPF) with R = 1.0 kΩ and C = 1.0μF.

63. Let H(f) denote the frequency response of the RC-LPF. Let f_1 be the highest frequency such that $0 \leq |f| \leq f_1, \frac{|H(f_1)|}{H(0)} \geq 0.95$. Then f_1 (in Hz) is

(a) 327.8 (b) 163.9 (c) 52.2 (d) 104.4

64. Let $t_g(f)$ be the group delay function of the given RC-LPF and f_2 = 100 Hz. Then $t_g(f_2)$ in ms, is

(a) 0.717 (b) 7.17 (c) 71.7 (d) 4.505

ZOLLEGE.in

Data for **Q.65 – 66** are given below. Solve the problems and choose the correct answers.

X(t) is a random process with a constant mean value of 2 and the autocorrelation function $R_X(\tau) = 4\left[e^{-0.2|\tau} + 1\right]$.

65. Let X be the Gaussian random variable obtained by sampling the process at t = t_i and let $Q(\alpha) = \int_{\alpha}^{\infty} \frac{1}{\sqrt{2\pi}} e^{\frac{-y^2}{2}} dy$.

The probability that $\left[x \le 1\right]$ is

(a) 1 – Q(0.5) (b) Q(0.5) (c) $Q\left(\frac{1}{2\sqrt{2}}\right)$ (d) $1 - Q\left(\frac{1}{2\sqrt{2}}\right)$

66. Let Y and Z be the random variables obtained by sampling X(t) at t =2 and t = 4 respectively. Let W = Y – Z. The variance of W is

(a) 13.36 (b) 9.36 (c) 2.64 (d) 8.00

67. Let x(t) = 2cos(800πt) + cos(1400πt). x(t) is sampled with the rectangular pulse train shown in figure. The only spectral components (in kHz) present in the sampled signal in the frequency range 2.5 kHz to 3.5 kHz are

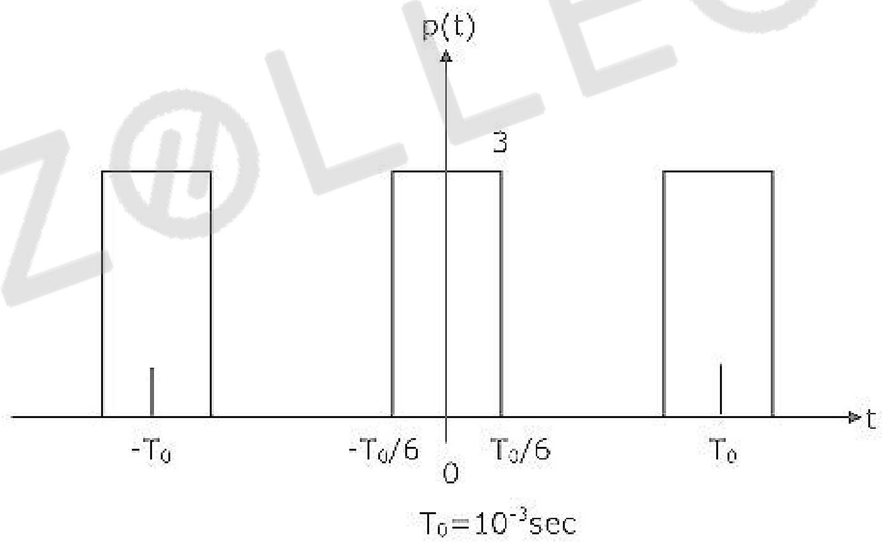

(a) 2.7, 3.4 (b) 3.3, 3.6

(c) 2.6, 2.7, 3.3, 3.4, 3.6 (d) 2.7, 3.3

68. The signal flow graph of a system is shown in figure. The transfer function $\frac{C(s)}{R(s)}$ of the system is

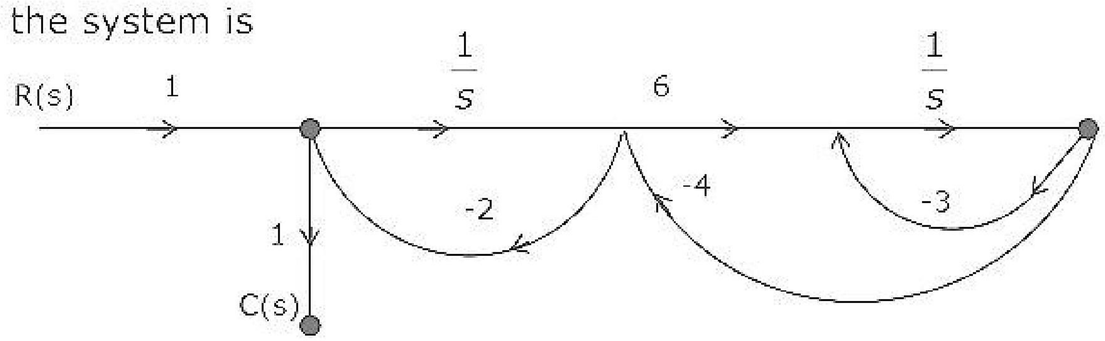

ZOLLEGE.in

(a) $\dfrac{6}{s^2+29s+6}$ (b) $\dfrac{6s}{s^2+29s+6}$ (c) $\dfrac{s(s+2)}{s^2+29s+6}$ (d) $\dfrac{s(s+27)}{s^2+29s+6}$

69. The root locus of the system $G(s)H(s)=\dfrac{K}{s(s+2)(s+3)}$ has the break-away point located at

(a) (-0.5,0) (b) (-2.548,0) (c) (-4,0) (d) (-0.784,0)

70. The approximate Bode magnitude plot of a minimum-phase system is shown in figure. The transfer function of the system is

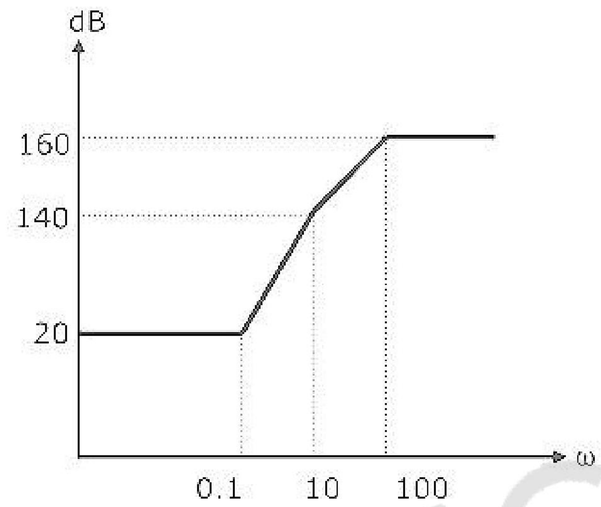

(a) $10^8\dfrac{(s+0.1)^3}{(s+10)^2(s+100)}$ (b) $10^7\dfrac{(s+0.1)^3}{(s+10)(s+100)}$

(c) $10^8\dfrac{(s+0.1)^2}{(s+10)^2(s+100)}$ (d) $10^9\dfrac{(s+0.1)^3}{(s+10)(s+100)^2}$

71. A second-order system has the transfer function $\dfrac{C(s)}{R(s)}=\dfrac{4}{s^2+4s+4}$.

with r(t) as the unit-step function, the response c(t) of the system is represented by

(a)

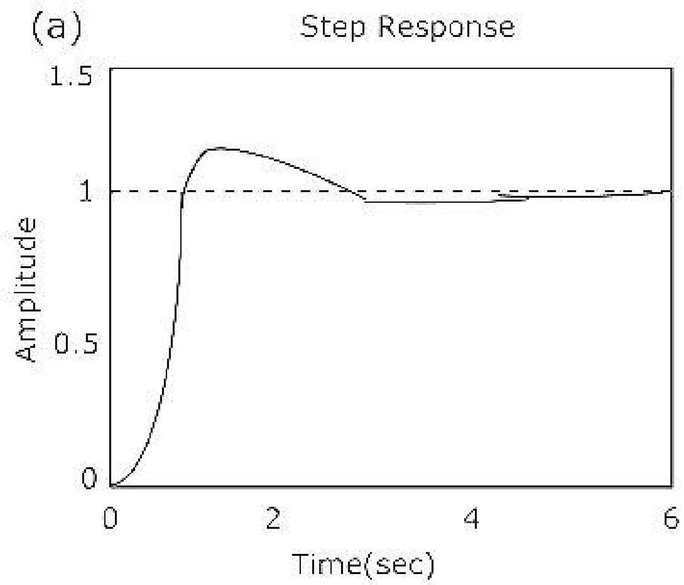

Figure (a)

(b)

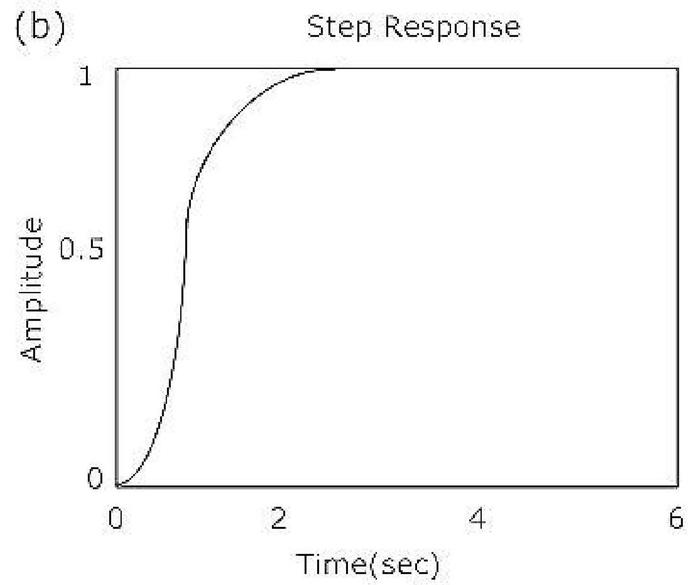

Figure (b)

ZOLLEGE.in

(c)

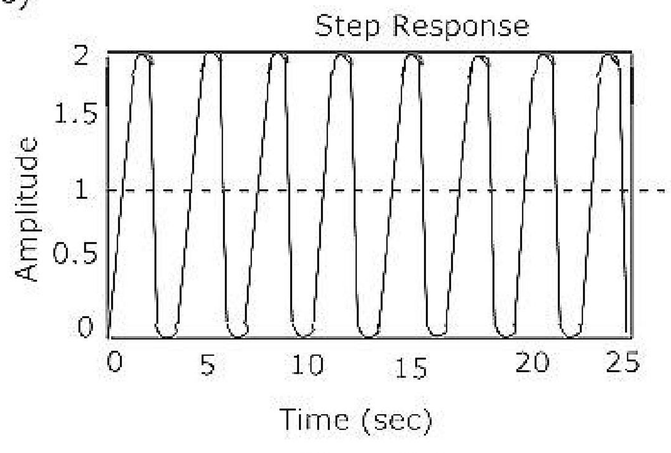

Figure (c)

(d)

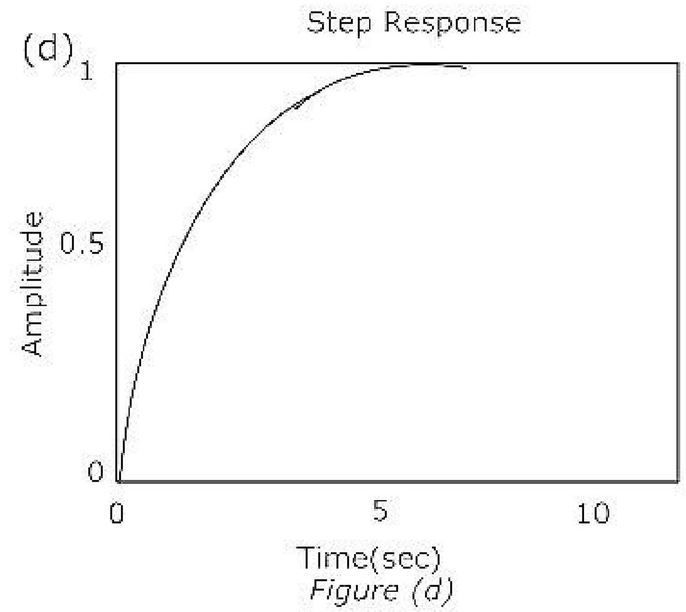

Figure (d)

(a) Figure (a) (b) Figure (b) (c) Figure (c) (d) Figure (d)

72. The gain margin and the phase margin of a feedback system with $G(s)H(s) = \dfrac{s}{(s+100)^3}$ are

(a) 0 dB, 0° (b) ∞, ∞ (c) ∞, 0° (d) 88.5 dB, ∞

73. The zero-input response of a system given by the state-space equation

$\begin{bmatrix} \dot{x}_1 \\ \dot{x}_2 \end{bmatrix} = \begin{bmatrix} 1 & 0 \\ 1 & 1 \end{bmatrix} \begin{bmatrix} x_1 \\ x_2 \end{bmatrix}$ and $\begin{bmatrix} x_1(0) \\ x_2(0) \end{bmatrix} = \begin{bmatrix} 1 \\ 0 \end{bmatrix}$ is

(a) $\begin{bmatrix} te^t \\ t \end{bmatrix}$ (b) $\begin{bmatrix} e^t \\ t \end{bmatrix}$ (c) $\begin{bmatrix} e^t \\ te^t \end{bmatrix}$ (d) $\begin{bmatrix} t \\ te^t \end{bmatrix}$

74. A DSB-SC signal is to be generated with a carrier frequency f_c = 1MHz using a nonlinear device with the input-output characteristic

$v_0 = a_0 v_i + a_1 v_i^3$

where a_0 and a_1 are constants. The output of the nonlinear device can be filtered by an appropriate band-pass filter.

Let $v_i = A_c' \cos(2\pi f_c' t) + m(t)$ where m(t) is the message signal. Then the value of f_c' (in MHz) is

(a) 1.0 (b) 0.333 (c) 0.5 (d) 3.0

ZOLLEGE.in

The data for **Q.75 – 76** are given below. Solve the problems and choose the correct answers.

Let $m(t) = \cos\left[\left(4\pi \times 10^3\right)t\right]$ be the message signal and $c(t) = 5\cos\left[\left(2\pi \times 10^6\right)t\right]$ be the carrier.

75. c(t) and m(t) are used to generate an AM signal. The modulation index of the generated AM signal is 0.5. Then the quantity $\frac{\text{Total sideband power}}{\text{Carrier power}}$ is

(a) $\frac{1}{2}$ (b) $\frac{1}{4}$ (c) $\frac{1}{3}$ (d) $\frac{1}{8}$

76. c(t) and m(t) are used to generate an FM signal. If the peak frequency deviation of the generated FM signal is three times the transmission bandwidth of the AM singal, then the coefficient of the term $\cos\left[2\pi\left(1008 \times 10^3 t\right)\right]$ in the FM signal (in terms of the Bessel coefficients) is

(a) $5J_4(3)$ (b) $\frac{5}{2}J_8(3)$ (c) $\frac{5}{2}J_8(4)$ (d) $5J_4(6)$

77. Choose the correct one from among the alternatives A, B, C, D after matching an item in Group 1 with the most appropriate item in Group 2.

Group 1	Group 2
P Ring modulator	1 Clock recovery
Q VCO	2 Demodulation of FM
R Foster-Seely discriminator	3 Frequency conversion
S Mixer	4 Summing the two inputs
	5 Generation of FM
	6 Generation of DSB-Sc

(a) P – 1 Q – 3 R – 2 S – 4 (b) P – 6 Q – 5 R – 2 S – 3
(c) P – 6 Q – 1 R – 3 S – 2 (d) P – 5 Q – 6 R – 1 S – 3

78. A superheterodyne receiver is to operate in the frequency range 550 kHz – 1650 kHz, with the intermediate frequency of 450 kHz. Let R = $\frac{C_{max}}{C_{min}}$ denote the required capacitance ratio of the local oscillator and I denote the image frequency (in kHz) of the incoming signal. If the receiver is tuned to 700 kHz, then

(a) R = 4.41, I = 1600 (b) R = 2.10, I = 1150
(c) R = 3.0, I = 1600 (d) R = 9.0, I = 1150

ZOLLEGE.in

79. A sinusoidal signal with peak-to-peak amplitude of 1.536 V is quantized into 128 levels using a mid-rise uniform quantizer. The quantization noise power is

(a) 0.768 V (b) $48 \times 10^{-6} V^2$ (c) $12 \times 10^{-6} V^2$ (d) 3.072 V

80. If E_b, the energy per bit of a binary digital signal, is 10^{-6} watt-sec and the one-sided power spectral density of the white noise, $N_0 = 10^{-5}$ W/Hz, then the output SNR of the matched filter is

(a) 26 dB (b) 10 dB (c) 20 dB (d) 13 dB

81. The input to a linear delta modulator having a step-size $\Delta = 0.628$ is a sine wave with frequency f_m and peak amplitude E_m. If the sampling frequency $f_s = 40$ kHz, the combination of the sine-wave frequency and the peak amplitude, where slope overload will take place is

	E_m	f_m
(a)	0.3 V	8 kHz
(b)	1.5 V	4 kHz
(c)	1.5 V	2 kHz
(d)	3.0 V	1 kHz

82. If S represents the carrier synchronization at the receiver and ρ represents the bandwidth efficiency, then the correct statement for the coherent binary PSK is

(a) $\rho = 0.5$, S is required (b) $\rho = 1.0$, S is required

(c) $\rho = 0.5$, S is not required (d) $\rho = 1.0$, S is not required

83. A signal is sampled at 8 kHz and is quantized using 8-bit uniform quantizer. Assuming SNR_q for a sinusoidal signal, the correct statement for PCM signal with a bit rate of R is

(a) R = 32 kbps, SNR_q = 25.8 dB (b) R = 64 kbps, SNR_q = 49.8 dB

(c) R = 64 kbps, SNR_q = 55.8 dB (d) R = 32 kbps, SNR_q = 49.8 dB

84. Medium 1 has the electrical permitivity $\varepsilon_1 = 1.5\ \varepsilon_0$ farad/m and occupies the region to the left of x = 0 plane. Medium 2 has the electrical permitivity $\varepsilon_2 = 2.5\ \varepsilon_0$ farad/m and occupies the region to the right of x = 0 plane. If E_1 in medium 1 is $E_1 = (2u_x - 3u_y + 1u_z)$ volt/m, then E_2 in medium 2 is

(a) $(2.0u_x - 7.5u_y + 2.5u_z)$ volt/m (b) $(2.0u_x - 2.0u_y + 0.6u_z)$ volt/m

(c) $(1.2u_x - 3.0u_y + 1.0u_z)$ volt/m (d) $(1.2u_x - 2.0u_y + 0.6u_z)$ volt/m

85. If the electric field intensity is given by $E = (xu_x + yu_y + zu_z)$ volt/m, the potential difference between X(20,0) and Y(1,2,3) is

ZOLLEGE.in

(a) +1 volt (b) -1 volt (c) +5 volt (d) +6 volt

86. A uniform plane wave traveling in air is incident on the plane boundary between air and another dielectric medium with $\varepsilon_r = 4$. The reflection coefficient for the normal incidence, is

(a) zero (b) $0.5\angle 180°$ (c) $0.333\angle 0°$ (d) $0.333\angle 180°$

87. If the electric field intensity associated with a uniform plane electromagnetic wave traveling in a perfect dielectric medium is give by

$E(z,t) = 10\cos\left(2\pi \times 10^7 t = 0.1\pi z\right)$ volt/m, then the velocity of the traveling wave is

(a) 3.00×10^8 m/sec (b) 2.00×10^8 m/sec

(c) 6.28×10^7 m/sec (d) 2.00×10^7 m/sec

88. A short-circuited stub is shunt connected to a transmission line as shown in Figure. If Z_0 = 50 ohm, the admittance Y seen at the junction of the stub and the transmission line is

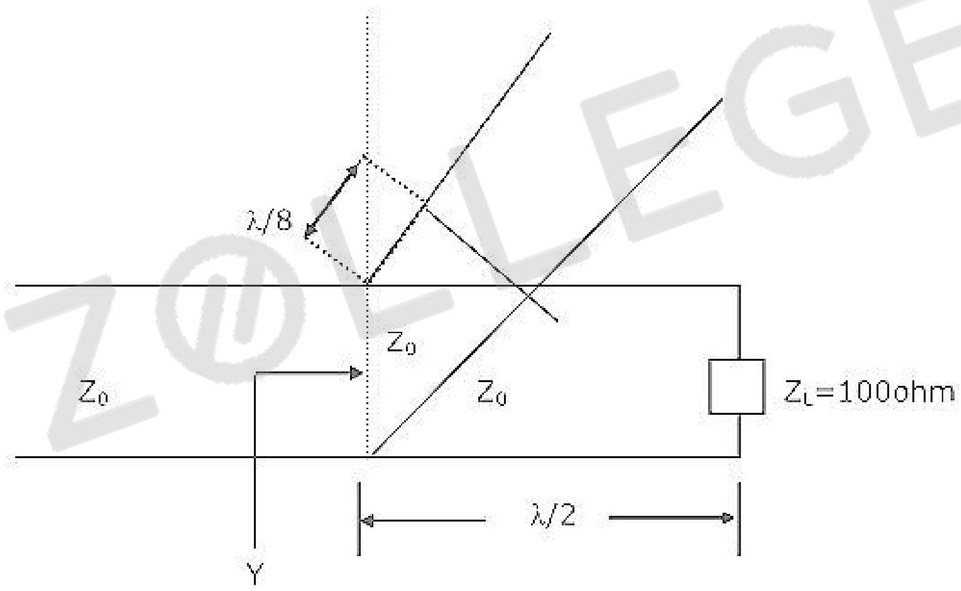

(a) (0.01 – j0.02) ohm (b) (0.02 – j0.01) ohm

(c) (0.04 – j0.02) ohm (d) (0.02 + j0) ohm

89. A rectangular metal wave-guide filled with a dielectric material of relative permitivity $\varepsilon_r = 4$ has the inside dimensions 3.0cm×1.2cm. The cut-off frequency for the dominant mode is

(a) 2.5 GHz (b) 5.0 GHz (c) 10.0 GHz (d) 12.5 GHz

ZOLLEGE.in

90. Two identical antennas are placed in the $\theta = \frac{\pi}{2}$ plane as shown in figure. The elements have equal amplitude excitation with 180° polarity difference, operating at wavelength λ. The correct value of the magnitude of the far-zone resultant electric field strength normalized with that of a single element, both computed for $\phi = 0$, is

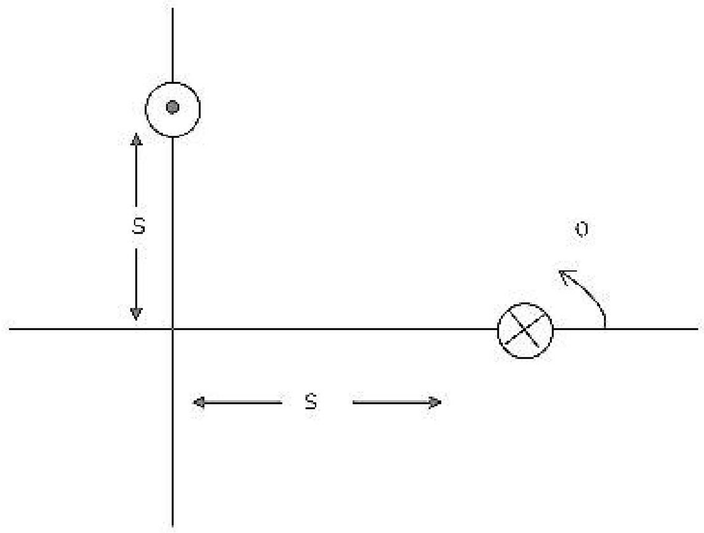

(a) $2\cos\left(\frac{2\pi s}{\lambda}\right)$ (b) $2\sin\left(\frac{2\pi s}{\lambda}\right)$ (c) $2\cos\left(\frac{\pi s}{\lambda}\right)$ (d) $2\sin\left(\frac{\pi s}{\lambda}\right)$

ZOLLEGE.in