General Aptitude (GA)

Q.1 – Q.5 Multiple Choice Question (MCQ), carry ONE mark each (for each wrong answer: – 1/3).

Q.1	**(i) Arun and Aparna are here.** **(ii) Arun and Aparna is here.** **(iii) Arun's families is here.** **(iv) Arun's family is here.** **Which of the above sentences are grammatically CORRECT?**
(A)	(i) and (ii)
(B)	(i) and (iv)
(C)	(ii) and (iv)
(D)	(iii) and (iv)

ZOLLEGE.in

ZOLLEGE.in

Q.2	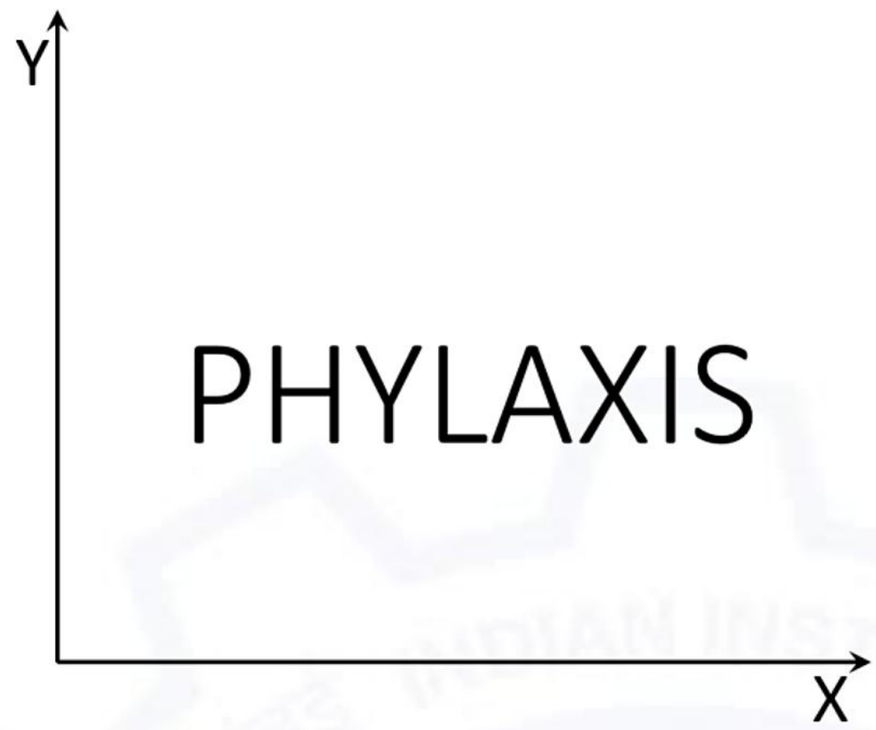 **The mirror image of the above text about the x-axis is**
(A)	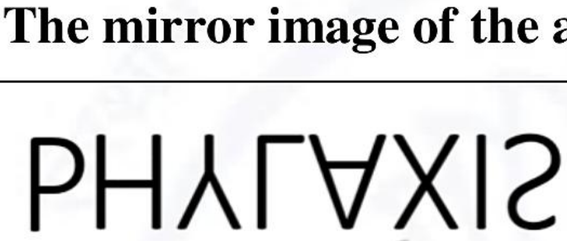
(B)	
(C)	
(D)	

ZOLLEGE.in

ZOLLEGE.in

Q.3	**Two identical cube shaped dice each with faces numbered 1 to 6 are rolled simultaneously. The probability that an even number is rolled out on each dice is:**
(A)	$\frac{1}{36}$
(B)	$\frac{1}{12}$
(C)	$\frac{1}{8}$
(D)	$\frac{1}{4}$

Q.4	**$\oplus$ and $\odot$ are two operators on numbers p and q such that** $p \odot q = p - q$**, and** $p \oplus q = p \times q$ **Then,** $(9 \odot (6 \oplus 7)) \odot (7 \oplus (6 \odot 5))$**=**
(A)	40
(B)	-26
(C)	-33
(D)	-40

Q.5	**Four persons P, Q, R and S are to be seated in a row. R should not be seated at the second position from the left end of the row. The number of distinct seating arrangements possible is:**
(A)	6
(B)	9
(C)	18
(D)	24

ZOLLEGE.in

Q. 6 – Q. 10 Multiple Choice Question (MCQ), carry TWO marks each (for each wrong answer: – 2/3).

Q.6	**On a planar field, you travelled 3 units East from a point O. Next you travelled 4 units South to arrive at point P. Then you travelled from P in the North-East direction such that you arrive at a point that is 6 units East of point O. Next, you travelled in the North-West direction, so that you arrive at point Q that is 8 units North of point P.** **The distance of point Q to point O, in the same units, should be _____**
(A)	3
(B)	4
(C)	5
(D)	6

Q.7	**The author said, "Musicians rehearse before their concerts. Actors rehearse their roles before the opening of a new play. On the other hand, I find it strange that many public speakers think they can just walk on to the stage and start speaking. In my opinion, it is no less important for public speakers to rehearse their talks."** **Based on the above passage, which one of the following is TRUE?**
(A)	The author is of the opinion that rehearsing is important for musicians, actors and public speakers.
(B)	The author is of the opinion that rehearsing is less important for public speakers than for musicians and actors.
(C)	The author is of the opinion that rehearsing is more important only for musicians than public speakers.
(D)	The author is of the opinion that rehearsal is more important for actors than musicians.

ZOLLEGE.in

ZOLLEGE.in

Q.8	1. **Some football players play cricket.** 2. **All cricket players play hockey.** **Among the options given below, the statement that logically follows from the two statements 1 and 2 above, is:**
(A)	No football player plays hockey.
(B)	Some football players play hockey.
(C)	All football players play hockey.
(D)	All hockey players play football.

Q.9

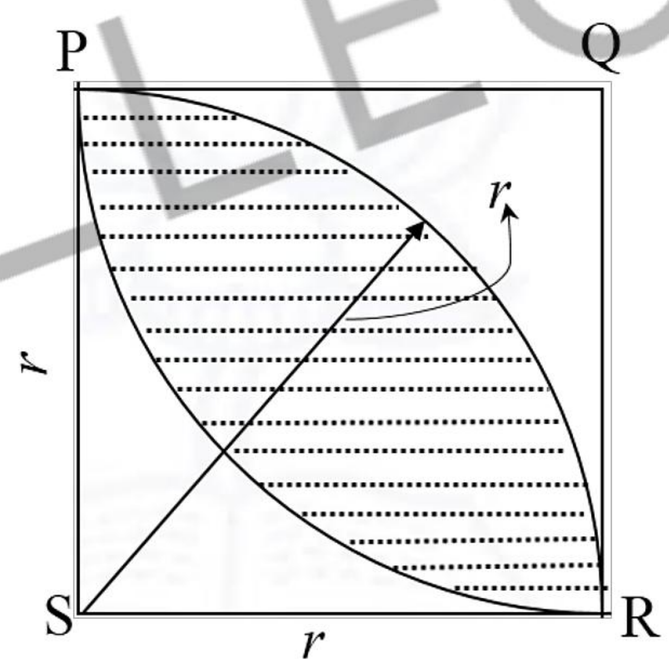

In the figure shown above, PQRS is a square. The shaded portion is formed by the intersection of sectors of circles with radius equal to the side of the square and centers at S and Q.

The probability that any point picked randomly within the square falls in the shaded area is _____

(A)	$4 - \frac{\pi}{2}$
(B)	$\frac{1}{2}$
(C)	$\frac{\pi}{2} - 1$
(D)	$\frac{\pi}{4}$

ZOLLEGE.in

Q.10	**In an equilateral triangle PQR, side PQ is divided into four equal parts, side QR is divided into six equal parts and side PR is divided into eight equal parts. The length of each subdivided part in cm is an integer.** **The minimum area of the triangle PQR possible, in cm^2, is**
(A)	18
(B)	24
(C)	$48\sqrt{3}$
(D)	$144\sqrt{3}$

ZOLLEGE.in

ZOLLEGE.in

Architecture and Planning (AR)

Q.1 – Q.25 Multiple Choice Question (MCQ), carry ONE mark each (for each wrong answer: – 1/3).

Q.1	**As per National Building Code of India, 2016, the function of an Automatic Rescue Device is to**
(A)	bring a stuck lift to the nearest landing level.
(B)	control fire in electrical system at plenum level.
(C)	control the escape route lighting system.
(D)	trigger fire sprinkler system.

Q.2	**Which among the following acronyms represents a thermal comfort index?**
(A)	PMV
(B)	NDVI
(C)	DEM
(D)	PCA

Q.3	**Indian satellite sensor that can be used for very high resolution mapping of urban areas is**
(A)	LANDSAT.
(B)	CARTOSAT.
(C)	RESOURCESAT.
(D)	MODIS.

ZOLLEGE.in

ZOLLEGE.in

Q.4	What is the smallest entity of raster data used in GIS?
(A)	Line
(B)	Pixel
(C)	Point
(D)	Polygon

Q.5	The correct sequence of stages during firing/burning of bricks is
(A)	Dehydration – Oxidation – Vitrification – Cooling.
(B)	Vitrification – Dehydration – Oxidation – Cooling.
(C)	Oxidation – Dehydration – Vitrification – Cooling.
(D)	Cooling – Oxidation – Vitrification – Dehydration.

Q.6	Industry Foundation Classes (IFC) in BIM is
(A)	a module used to improve energy savings.
(B)	an algorithm related to the precision of the BIM model.
(C)	a program based on Bezier Splines.
(D)	an object oriented data model to facilitate interoperability.

Q.7	As per urban design principles proposed by Gordon Cullen, Rashtrapati Bhavan, New Delhi, is an example of
(A)	Serial Vision.
(B)	Pinpointing.
(C)	Occupied territory.
(D)	Here and there.

ZOLLEGE.in

ZOLLEGE.in

Q.8	**A waste water pipe connecting two inspection chambers (IC) is laid at a slope of 1:200. The Invert Level of the starting IC is -450 mm. The Invert level of the second pit at a distance of 40 m from the first IC is**
(A)	-650 mm.
(B)	-200 mm.
(C)	-250 mm.
(D)	-550 mm.

Q.9	**From the images P, Q and R given below, select the corresponding land use categories according to Alonso's Bid Rent Theory.**

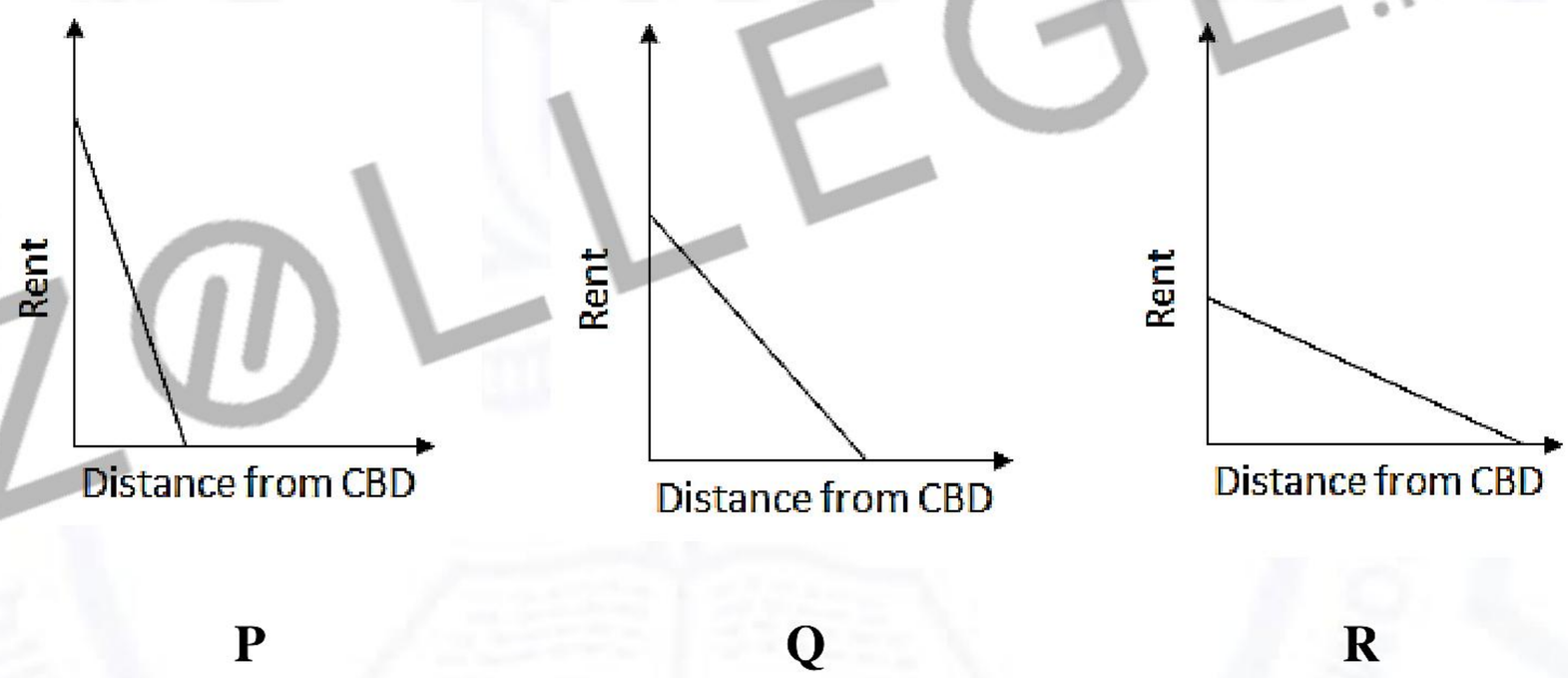

(A)	P–Manufacturing; Q–Residential; R–Retail
(B)	P–Retail; Q–Residential; R–Manufacturing
(C)	P–Residential; Q–Retail; R–Manufacturing
(D)	P–Retail; Q–Manufacturing; R–Residential

Q.10	**The urban land use model based on the concept of a polycentric city is known as**
(A)	Burgess Model.
(B)	Harris and Ullman model.
(C)	Hagerstrand's Model.
(D)	Homer Hoyt's model.

ZOLLEGE.in

Q.11	**The total head or total lift against which a pump works includes suction lift, discharge lift and**
(A)	cone of depression.
(B)	salvage lift.
(C)	water horse power.
(D)	frictional head loss.

Q.12	**The two components for measuring time of concentration for storm water are**
(A)	overland flow time and retention time.
(B)	overland flow time and gutter flow time.
(C)	detention time and gutter flow time.
(D)	retention time and inlet time.

Q.13	**The traffic assignment technique where the traffic arranges itself in congested networks such that the journey time in all used routes between an Origin-Destination pair are equal and less than those that would be experienced in all unused routes. This is known as**
(A)	System equilibrium.
(B)	All–or–nothing.
(C)	User equilibrium.
(D)	Incremental.

ZOLLEGE.in

ZOLLEGE.in

Q.14	**What is the dependent variable in a regression based trip generation model?**
(A)	Population of Traffic Analysis Zone
(B)	Number of trips
(C)	Number of employees
(D)	Number of households

Q.15	**The curve traced by a point on a circle rolling inside another circle is known as**
(A)	hypocycloid.
(B)	helix.
(C)	involute.
(D)	hyperbola.

Q.16	**The law of Primate City was first proposed by**
(A)	Samuel A. Stouffer.
(B)	Colin Clark.
(C)	Mark Jefferson.
(D)	Harold Hotelling.

Q.17	**In the European Union which constitutes the cities namely, London, Paris, Brussels, Amsterdam, Cologne, Frankfurt, Munich and Milan, lie within a linear megalopolitan zone known as**
(A)	Purple Zone.
(B)	Golden Polygon.
(C)	Blue Banana.
(D)	Yellow Corridor.

ZOLLEGE.in

ZOLLEGE.in

Q.18	**An urban governance tool to mobilize financial resources by permitting additional FAR over and above the prescribed FAR by imposing a charge or fee for the same is known as**
(A)	Betterment Levy.
(B)	Impact Fee.
(C)	Land Value Increment Tax.
(D)	Floor Area Incentive Tax.

Q.19	**Identify the colour palette that is created using any three equally spaced hues around the colour wheel.**
(A)	Split – complementary
(B)	Analogous
(C)	Triads
(D)	Complementary

Q.20	**Coefficient of Performance (COP) for heat pump is used to calculate**
(A)	the number of air changes.
(B)	the Energy Efficiency Ratio.
(C)	the Energy Select Sector index.
(D)	the Indoor Air Quality index.

ZOLLEGE.in

ZOLLEGE.in

Q.21	**Freight flows are converted to truck flows using**
(A)	Volume factor.
(B)	Weight factor.
(C)	Payload factor.
(D)	Distance load factor.

Q.22	**Rebound hammer test is used to measure**
(A)	permeability of concrete.
(B)	bond stress between rebar and concrete.
(C)	compressive strength of concrete.
(D)	tensile strength of concrete.

Q.23	**Which type of temporary supporting structure can be used in case of rebuilding the lower part of a load bearing wall at ground floor above plinth level?**
(A)	Dead Shore
(B)	Pit Underpinning
(C)	Flying Shore
(D)	Needle Scaffolding

Q.24	**During earthquake, soft storey failure in a building is due to**
(A)	shear failure initiated by short column effect.
(B)	stress discontinuity initiated by abrupt changes of stiffness.
(C)	failure of column initiated by weak column – strong beam effect.
(D)	drift of building storey initiated by pounding effect.

ZOLLEGE.in

ZOLLEGE.in

Q.25 **Following five activities are associated with construction contract management. Choose the option showing the correct progressive sequence of the activities.**

P	**Opening of Bid**
Q	**Submission of Security Deposit**
R	**Publication of Notice Inviting Tender (NIT)**
S	**Issue of Letter of Intent (LOI)**
T	**Submission of Earnest Money Deposit (EMD)**

(A) R – Q – P – T – S

(B) S – P – R – T – Q

(C) R – T – P – S – Q

(D) S – T – P – R – Q

ZOLLEGE.in

ZOLLEGE.in

Q.26 – Q.36 Multiple Choice Question (MCQ), carry TWO mark each (for each wrong answer: – 2/3).

Q.26 **Match the acronyms in Group I with the particulars in Group II.**

Group I		Group II	
P	**LCA**	**1**	**building certification system**
Q	**IPCC**	**2**	**hydrological assessment tool**
R	**Mtoe**	**3**	**climate change**
S	**LEED**	**4**	**equivalent measure of energy expended**
		5	**cradle to grave**

(A) P–3, Q–5, R–4, S–2

(B) P–4, Q–3, R–1, S–2

(C) P–5, Q–4, R–2, S–1

(D) P–5, Q–3, R–4, S–1

ZOLLEGE.in

ZOLLEGE.in

Q.27 **Match the buildings in Group I with their corresponding architect in Group II.**

Group I

P	Q	R	S
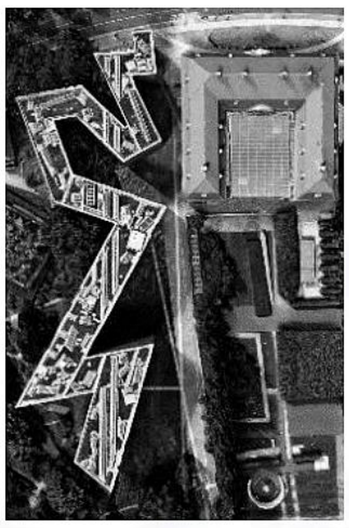		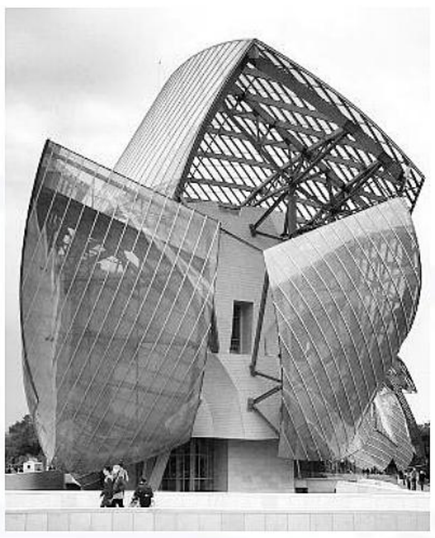	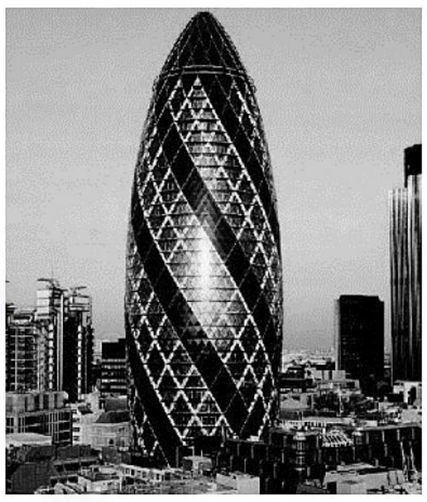

Group II

(1) Renzo Piano	(2) Daniel Libeskind	(3) David Childs	(4) Frank Owen Gehry	(5) Norman Foster

(A)	P–4, Q–3, R–1, S–2
(B)	P–2, Q–4, R–2, S–5
(C)	P–3, Q–5, R–4, S–1
(D)	P–2, Q–3, R–4, S–5

ZOLLEGE.in

ZOLLEGE.in

Q.28 **Match the heritage conservation charters in Group I with their focus areas in Group II.**

Group I		Group II	
P	**Washington Charter**	**1**	**Conservation of historic gardens**
Q	**Florence Charter**	**2**	**Conservation of places of cultural significance**
R	**Venice Charter**	**3**	**Authenticity**
S	**Burra Charter**	**4**	**Conservation & restoration of monuments and sites**
		5	**Conservation of historic towns**

(A) P–3, Q–1, R–4, S–5

(B) P–5, Q–4, R–1, S–2

(C) P–5, Q–1, R–4, S–2

(D) P–4, Q–1, R–3, S–2

ZOLLEGE.in

ZOLLEGE.in

Q.29 **Match the Buildings (name of architects) in Group I with the abstractions used in Group II.**

Group I		Group II	
P	**The School for Spastic Children, New Delhi (Romi Khosla)**	**1**	**Cosmos in geometric form**
Q	**Jawahar Kala Kendra, Jaipur (Charles Correa)**	**2**	**Panchavati**
R	**Capitol Complex, Chandigarh (Le Corbusier)**	**3**	**Plan form of Hindu temple**
S	**Oberoi Hotel, Bhubaneswar (Satish Grover)**	**4**	**Bull's horns**
		5	**Mother's womb**

(A) P–4, Q–2, R–1, S–3

(B) P–5, Q–1, R–4, S–3

(C) P–2, Q–1, R–3, S–2

(D) P–5, Q–2, R–4, S–1

ZOLLEGE.in

ZOLLEGE.in

Q.30 **Match the names of the gardens in Group I with their type in Group II.**

Group I		Group II	
P	**Shalimar Bagh, Srinagar**	**1**	**Hanging Garden**
Q	**Pherozeshah Mehta Garden, Mumbai**	**2**	**Memorial Garden**
R	**Lalbagh Garden, Bangalore**	**3**	**Rock Garden**
S	**Nek Chand's Garden, Chandigarh**	**4**	**Botanical Garden**
		5	**Mughal Garden**

(A) P–3, Q–1, R–2, S–4

(B) P–5, Q–1, R–4, S–3

(C) P–5, Q–3, R–4, S–2

(D) P–5, Q–4, R–1, S–3

ZOLLEGE.in

ZOLLEGE.in

Q.31 **Match the various types of impurities present in water in Group I with the appropriate water treatment process given in Group II.**

Group–I		Group–II	
P	Fine suspended matter	1	Aeration
Q	Pathogenic bacteria	2	Plain sedimentation
R	Color, odour and taste	3	Sedimentation with coagulation
S	Floating matter as leaves	4	Screening
		5	Disinfection

(A) P–2, Q–5, R–3, S–4

(B) P–3, Q–4, R–1, S–2

(C) P–1, Q–4, R–3, S–2

(D) P–3, Q–5, R–1, S–4

Q.32 **Match the temples in Group I with their style of Architecture in Group II**

Group I		Group II	
P	Badami Cave Temples	1	Pandya style
Q	Kalugumalai Temple Complex	2	Chola style
R	Airavatesvara Temple	3	Chalukya style
S	Chennakeshava Temple	4	Vijayanagara style
		5	Hoysala style

(A) P–3, Q–1, R–2, S–5

(B) P–3, Q–4, R–2, S–1

(C) P–2, Q–1, R–3, S–5

(D) P–5, Q–1, R–4, S–2

ZOLLEGE.in

Q.33 **Match the urban form/structure in Group I with their respective proponents in Group II.**

Group I		Group II	
P	**Trabantenstadte**	**1**	**Arturo Soria Y Mata**
Q	**Linear city**	**2**	**Le Corbusier**
R	**Bloomsbury Precinct**	**3**	**Ernst May**
S	**Radiant city**	**4**	**Frank Lloyd Wright**
		5	**Patrick Abercrombie**

(A) P–4, Q–1, R–5, S–3

(B) P–5, Q–1, R–4, S–2

(C) P–3, Q–1, R–5, S–2

(D) P–3, Q–4, R–1, S–2

ZOLLEGE.in

ZOLLEGE.in

Q.34 **Match the elements in Group I to their description in Group II.**

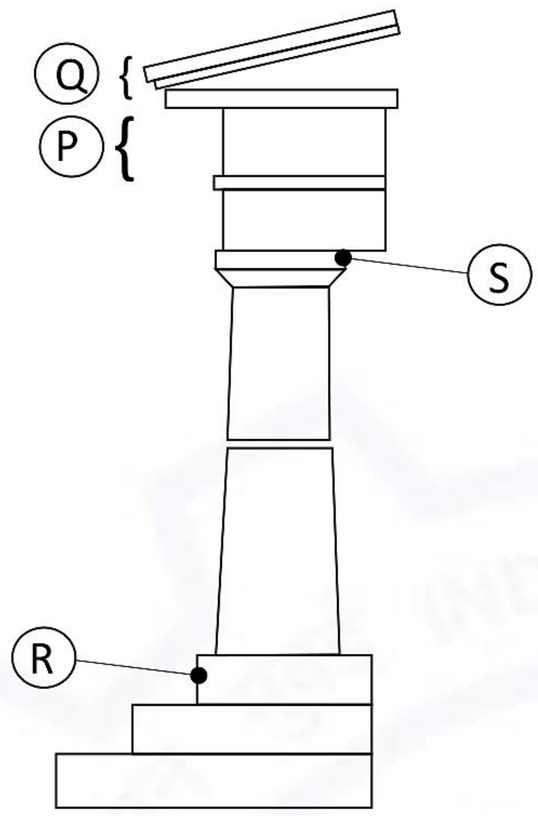

Group I	Group II	
P	1	Cornice
Q	2	Stylobate
R	3	Stereobate
S	4	Abacus
	5	Frieze

(A) P–3, Q–1, R–5, S–4

(B) P–4, Q–3, R–1, S–2

(C) P–5, Q–4, R–2, S–1

(D) P–5, Q–1, R–2, S–4

ZOLLEGE.in

ZOLLEGE.in

Q.35 **Match the position of feet in Group I to the most appropriate description of stability of human body in Group II.**

Group I		Group II	
P		**1**	**Stable antero-posteriorly**
Q	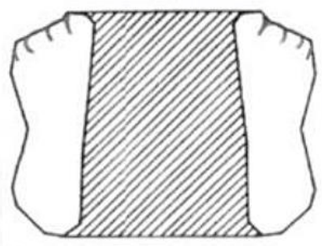	**2**	**Laterally stable**
R		**3**	**Fairly stable in all directions**
S	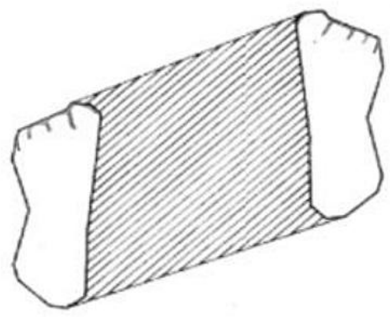	**4**	**Vertically stable**
		5	**Unstable**

(A)	P–5, Q–5, R–2, S–1
(B)	P–5, Q–3, R–1, S–2
(C)	P–1, Q–3, R–4, S–2
(D)	P–4, Q–3, R–2, S–1

ZOLLEGE.in

ZOLLEGE.in

Q.36 **Match the buildings in Group I with their corresponding structural systems in Group II.**

Group I		Group II	
P	**Empire State Building, New York, USA**	**1**	**Trusses Tube**
Q	**John Hancock Center, Chicago, USA**	**2**	**Bundled Tube**
R	**Taipei 101, Taiwan**	**3**	**Tube in Tube**
S	**Sears Tower, Chicago, USA**	**4**	**Outrigger Frame**
		5	**Shear Truss**

(A) P–5 , Q–3 , R–4 , S–1

(B) P–3 , Q–5 , R–1 , S–2

(C) P–5 , Q–4, R–1 , S–2

(D) P–5 , Q–1 , R–4 , S–2

ZOLLEGE.in

Q.37 – Q.43 Multiple Select Question (MSQ), carry TWO mark each (no negative marks).

Q. 37	**Choose the correct options with respect to cycle track design as per Indian Road Congress guidelines.**
(A)	The minimum width of cycle track is 3 m if overtaking is to be provided for
(B)	Cycle tracks may be provided when peak hour cycle traffic is 400 or more on routes with a traffic of 100 to 200 vehicles/hour
(C)	Maximum gradient allowed for cycle tracks is 1 in 15
(D)	Cyclist should have a clear view of at least 80 m

Q.38	**As per the Right to Fair Compensation and Transparency in Land Acquisition, Rehabilitation and Resettlement Act, 2013, for which purposes can the urgency clause for land acquisition be invoked?**
(A)	National defence and security purposes
(B)	Affordable housing program
(C)	Industrial projects
(D)	Emergency arising out of natural calamities

Q.39	**Which of the following international treaties are related to Climate Change and global warming?**
(A)	Cartagena protocol, 2000
(B)	Copenhagen summit, 2001
(C)	Nagoya protocol, 2010
(D)	Paris Agreement, 2016

ZOLLEGE.in

ZOLLEGE.in

Q.40	Which of the following algorithms are used for finding the shortest path in an urban transportation network?
(A)	Logit
(B)	Huff
(C)	Floyd Warshall
(D)	Dijkstra

Q.41	Which of the following statements are true with respect to surface paint?
(A)	Paint is glossy when Pigment Volume Concentration is high
(B)	Vehicle is the volatile part of the paint
(C)	Base of the paint is usually oxides of metals
(D)	High VOC content is preferred in paints

Q.42	As per the Solid Waste Management Rules 2016, which among the following are 'Duties of waste generators'?
(A)	Segregate and store waste generated in four separate streams namely, combustible, non-combustible, organic and domestic hazardous waste
(B)	Store construction and demolition waste separately within own premise before disposal
(C)	All waste generator shall pay user fee for solid waste management
(D)	Compost horticulture waste and garden waste separately within own premise

Q.43	Choose the correct options with regard to activated sludge process.
(A)	The activated sludge process is an aerobic process
(B)	The entire settled sludge is sent back to the aeration tank
(C)	The entire effluent from the final settling tank is sent back to the aeration tank
(D)	In aeration tanks, sewage is aerated and agitated for a few hours

ZOLLEGE.in

Q.44 – Q.55 Numerical Answer Type (NAT), carry TWO mark each (no negative marks).

Q.44 A rectangular hall having dimension of 8.0 m × 14.0 m × 4.0 m has total 4 windows (1.5 m x 1.0 m each) and 2 doors (1.0 m × 2.0 m each).

The coefficients of absorption are given below. Considering all windows open and doors closed, the reverberation time in seconds is _____.

[*round off to 2 decimal places*]

Description of item	Absorption coefficient
Coefficient of absorption of wall, floor and ceiling	0.2
Coefficient of absorption of door and window	0.4

Q.45 If surface conductance of external surface is 20 W/m^2 ^{o}C, absorbance of the surface is 0.66 and U value of the wall is 1.2 W/m^2 ^{o}C, the solar gain factor of a wall is _____. [*round off to 2 decimal places*]

Q.46 The initial cost of a property is INR 4,00,000 and its future life is 30 years. Considering the scrap value as 10% of its initial cost and rate of interest as 5%, the sinking fund (deposited at the end of year) for the property is INR _____.

[*round off to 2 decimal places*]

ZOLLEGE.in

Q.47	**Reading in the staff stationed at P measured by a dumpy level is 3.5 m. The dumpy level is stationed at Q. The Reference Level (RL) at point P is 96.5 m and the height of the dumpy level is 1.25 m. The RL at point Q is _____ m.** [*round off to 2 decimal places*] 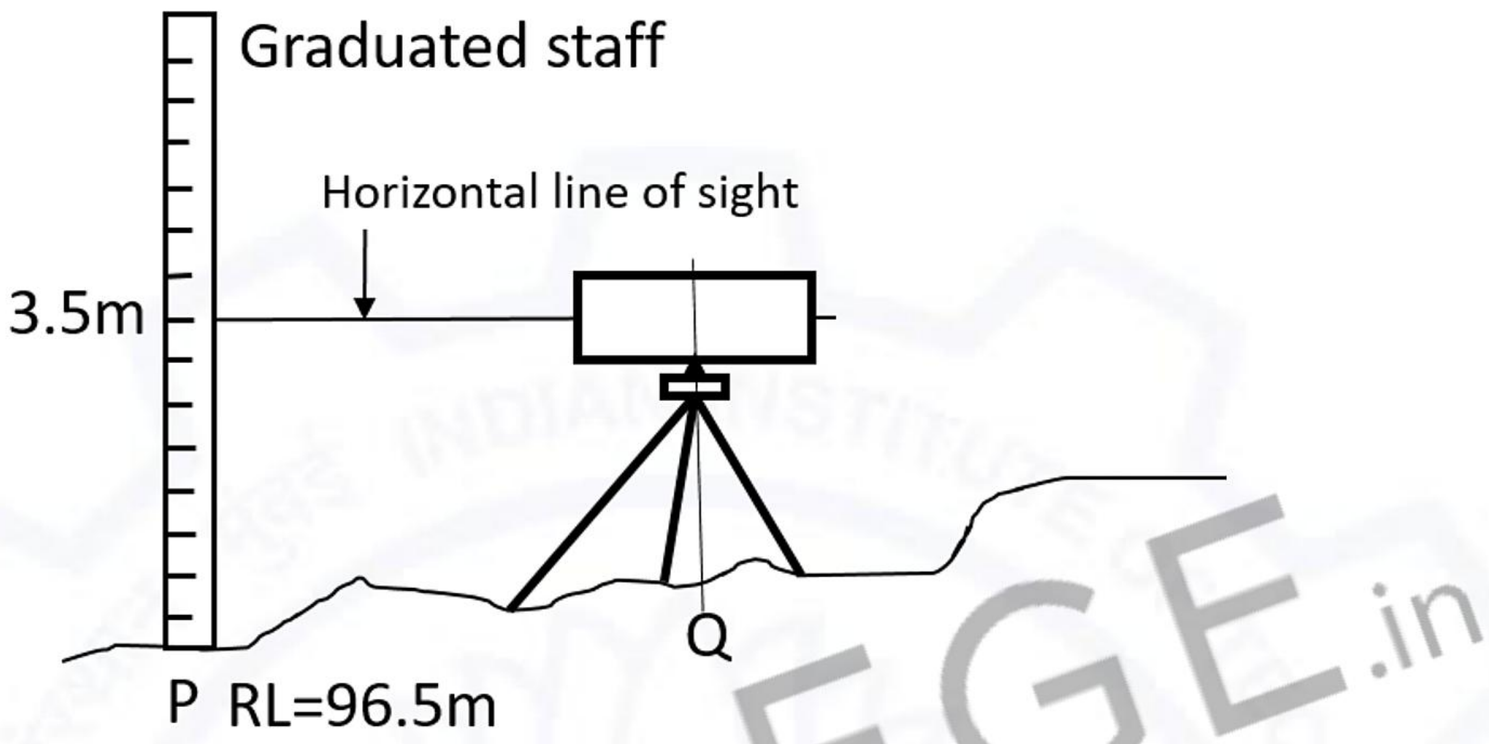

Q.48	**A circular cricket field of 180 m diameter is illuminated by four floodlight towers. The floodlight towers are equally spaced along the perimeter of the field. The height of the floodlight tower is 48 m. Using 'Inverse Square Law', the illumination level at the center of the field is found as 750 Lux. Each tower is consisting of 50 lamps. The rating of each lamp is 700 Watt. The efficacy of each lamp is _____ Lumen /Watt.** [*round off to 2 decimal places*]

Q.49	**A building is constructed on a plot measuring 70 m × 40 m. The utilized FAR of the building is 1.5. An energy audit team found that the average monthly electricity bill of the building is INR 2,94,000. The unit cost of the electricity is INR 7. The Building Energy Index is _____ kW-hr/m^2/year.** [*in integer*]

Q.50	**A simply-supported steel beam made of an I-section has a span of 8 m. The beam is carrying a uniformly distributed load of 15 kN/m. The overall depth of the beam is 450 mm. The moment of inertia of the beam section is 18000 cm^4. The maximum bending stress in the beam will be _____ N/mm^2.** [*in integer*]

ZOLLEGE.in

Q.51	**The slenderness ratio of a circular column of diameter 300 mm and effective height 3 m is _____. [*in integer*]**

Q.52 **A construction project consists of following five activities. The immediate successor activity relationship and duration of each activity are mentioned in the table below.**

Activity	Immediate Successor Activity	Duration (Weeks)
P	R	2
Q	R and S	4
R	T	5
S	–	6
T	–	3

The total duration of the project is _____ weeks. [*in integer*]

Q.53	**It is proposed to have ceramic tile flooring in a room having internal clear dimension of 1.8 m × 2.4 m. Tile sizes are 300 mm × 300 mm. The door opening is 900 mm and the door is flushed with the internal face of the wall. The height of skirting is 600 mm. The number of ceramic tiles required for internal flooring and skirting is _____.[*in integer*]**

Q.54	**In a housing project, 75% of the permissible FAR was utilised after constructing four numbers eight storey MIG towers with identical floor area of 400 sqm. If three numbers seven storey LIG towers with identical floor area are built utilising the remaining FAR, the floor area of each LIG tower is _____ sqm.** **[*round off to 2 decimal places*]**

ZOLLEGE.in

Q.55 **Using the following values of thermal conductance, surface conductance and thermal resistance, the U value across the given wall cross-section is _____W/m² °C. [*round off to 2 decimal places*]**

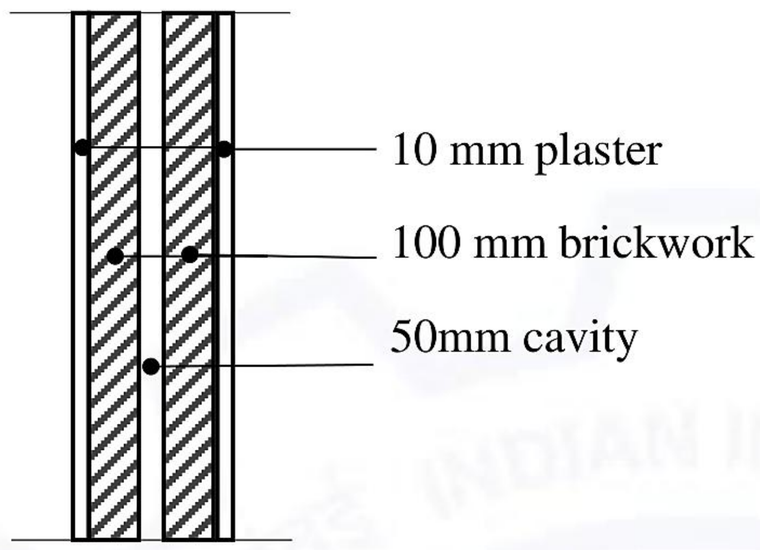

Thermal conductance -
- Brick wall 1.2 W/m °C
- Plastering 0.5 W/m °C

Surface conductance -
- Internal surface 8.0 W/m² °C
- External surface 9.5 W/m² °C

Thermal resistance -
- 50mm wall cavity 0.17 m² °C/W

END OF THE QUESTION PAPER

ZOLLEGE.in